Technical data
Hydraulic lift crane

LR 1160
Litronic®

LIEBHERR

Dimensions

Basic machine with undercarriage

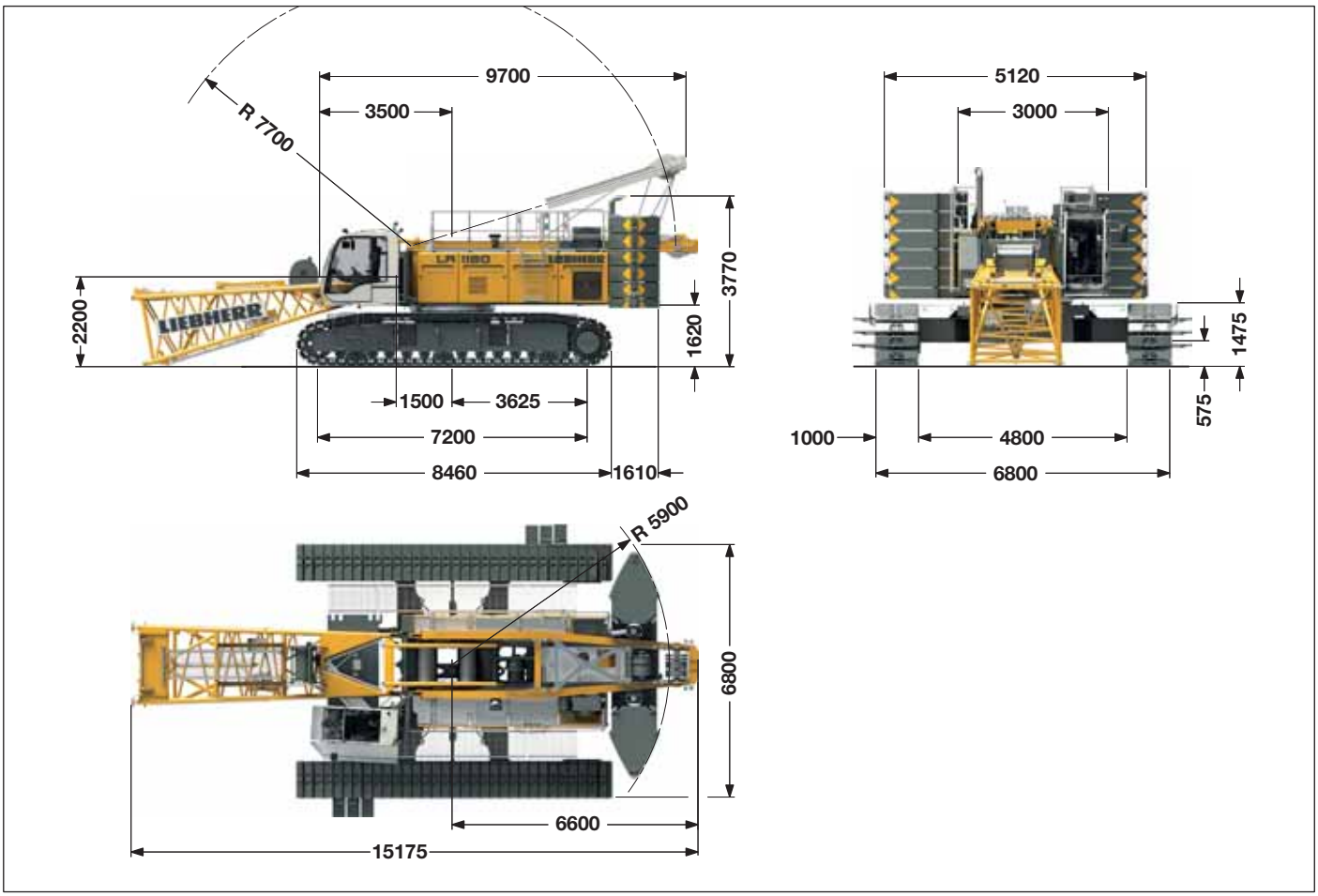

Operating weight

The operating weight includes the basic machine with crawlers, 2 main winches 120 kN and 20 m main boom, consisting of A-frame, boom foot (7 m), boom head (7 m), boom extension (6 m), 62.2 t basic counterweight, 20 t carbody counterweight and 160 t hook block.

Total weight ———— approx. 167 t

Ground pressure

Ground bearing pressure ———— 1.16 kg/cm²

Equipment

Main boom (No. 2018.xx) max. length ———— 87.5 m
High reach (No. 2018.xx and 1309.xx) ———— 104.9 m
High reach (No. 2018.xx and 1713.xx) ———— 101.1 m
Luffing jib (No. 1309.xx) max. length ———— 78.5 m
Max. combination ———— main boom 55.1 m
luffing jib 78.5 m
Luffing jib (No. 1713.xx) max. length ———— 83 m
Max. combination ———— main boom 52.1 m
luffing jib 83 m
Fixed jib (No. 0806.xx) ———— 11 m – 32 m
Fixed jib (No. 1008.xx) ———— 11 m – 26 m
Auxiliary jib 24 t (option 36 t)

Remarks

1. The lifting capacities stated are valid for lifting operation only (corresponding with crane classification according to F.E.M. 1.001. crane group A1).
2. Crane standing on firm, horizontal ground.
3. The weight of the lifting device (hoisting ropes, hook block, shackle etc.) must be deducted form the gross lifting capacity to obtain a net lifting value.
4. Additional equipment on boom (e.g. boom walkways, auxiliary jib) must be deducted to get the net lifting capacity.
5. For max. wind speed please refer to lift chart in operator‘s cab or manual.
6. Working radii are measured from center of swing and under load.
7. The lifting capacities are valid for 360 degrees of swing.
8. Calculation of stability under load is based on DIN 15019 / part 2 / chart 1 and ISO 4305 Table 1 + 2, tipping angle 4°.
9. The structures are calculated according to F.E.M. 1.001 - 1998 (EN 13001-1; EN 13001-2).

Transport dimensions and weights

Basic machine and main boom (No. 2018.xx)

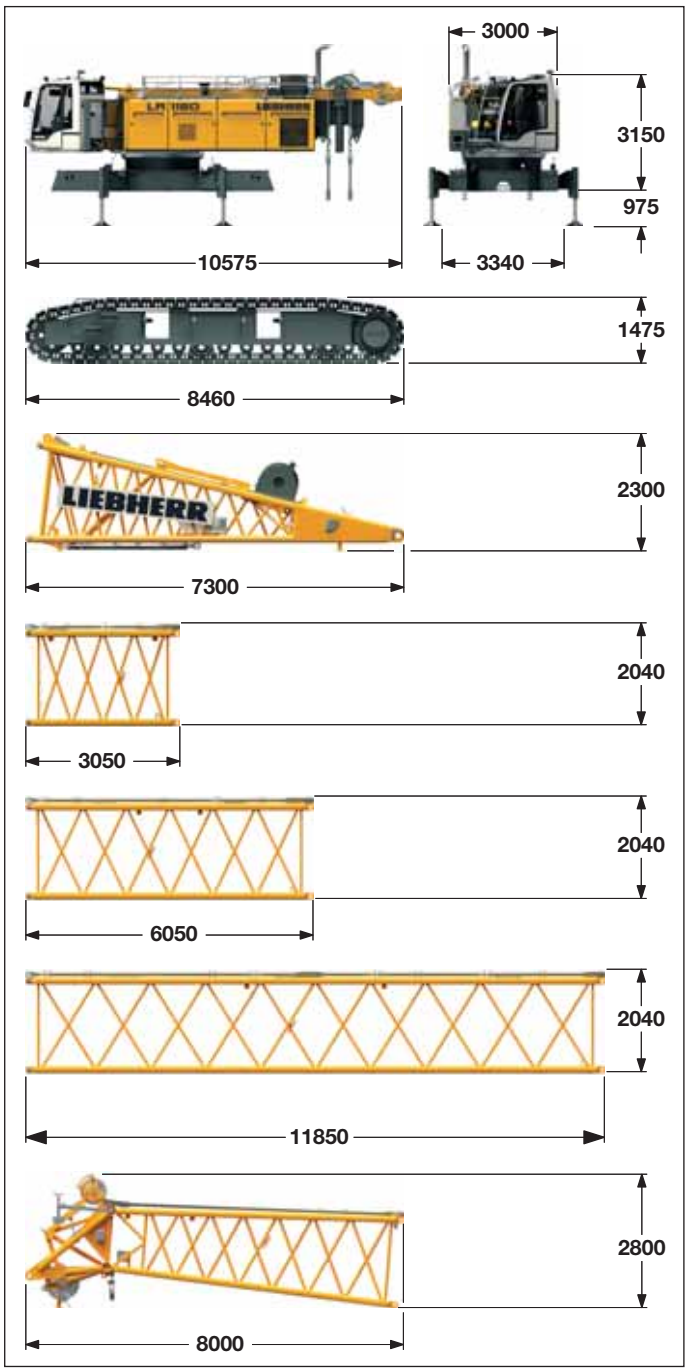

Basic machine	
with A-frame, 2x 120 kN crane winches without boom foot, hoist ropes, basic counterweight and crawlers	
Width	3000 mm
Weight	35000 kg
Weight of hoist rope	3.42 kg/m

Crawler	2 x
Track pads	1000 mm
Width	1180 mm
Weight	17260 kg

Boom foot (No. 2018.23)	
Width	2140 mm
Weight without winch	3000 kg
Weight incl. winch and rope	4550 kg

Boom section (No. 2018.20)	3 m
Width	2140 mm
Weight with HPT[1)]	680 kg
Weight with HPT[1)] and NDL[2)]	750 kg

Boom section (No. 2018.20)	6 m
Width	2140 mm
Weight with HPT[1)]	990 kg
Weight with HPT[1)] and NDL[2)]	1100 kg

Boom section (No. 2018.20)	11.7 m
Width	2140 mm
Weight with HPT[1)]	1670 kg
Weight with HPT[1)] and NDL[2)]	1900 kg

Boom head (No. 2018.20)	
Width	2140 mm
Weight with HPT[1)]	2900 kg

1) Pendant straps for main boom • 2) Pendant straps for jib

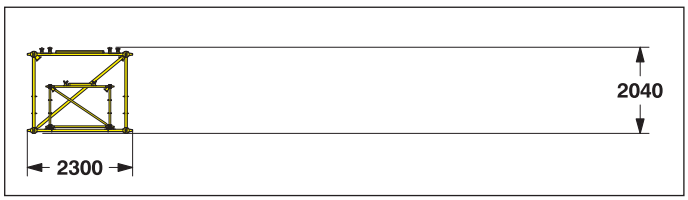

*) Including pendant straps

Boom transport option		
11.7 m boom - and 11.7 m jib extension 6.0 m boom - and 6.0 m jib extension		
(No. 2018.xx/1309.xx)	6 m/6 m	11.7 m/11.7 m
Length	6150 mm	11850 mm
Weight*	1620 kg	2860 kg

Transport dimensions and weights

Luffing jib (No. 1309.xx)

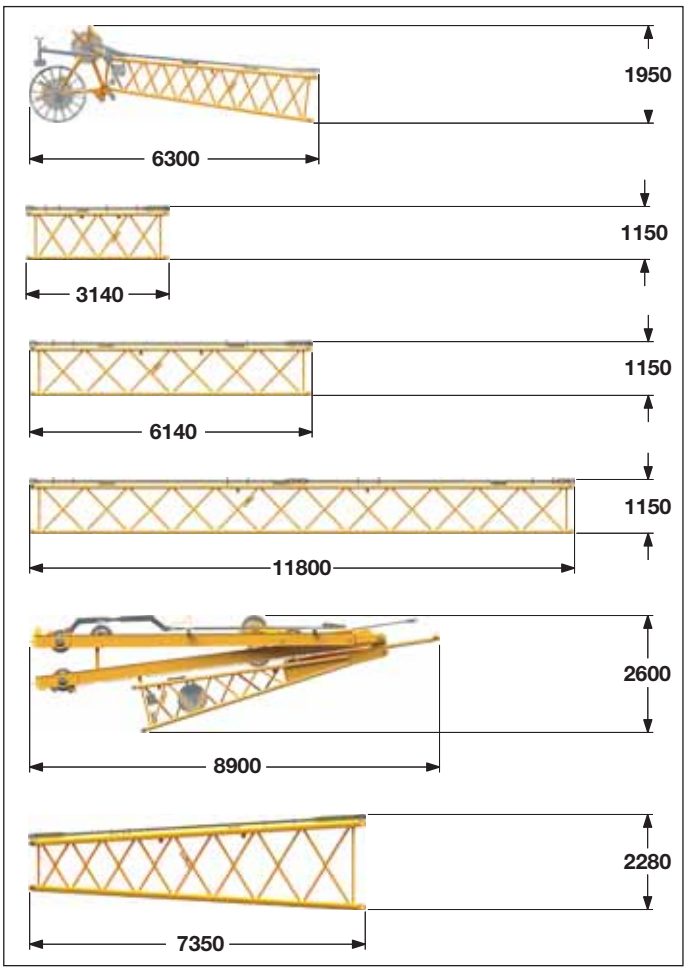

Luffing jib head (No. 1309.22)	
Width	1390 mm
Weight*	1600 kg

Luffing jib section (No. 1309.20)	3 m
Width	1390 mm
Weight*	420 kg

Luffing jib section (No. 1309.20)	6 m
Width	1390 mm
Weight*	520 kg

Luffing jib section (No. 1309.20)	11.7 m
Width	1390 mm
Weight*	960 kg

Luffing jib foot with A-frames (No. 1309.22)	
Width	1700 mm
Weight*	4450 kg

Boom section tapered (No. 2018/1309.20)	7.2 m
Width	2140 mm
Weight*	1060 kg

Fixed jib (No. 0806.xx)

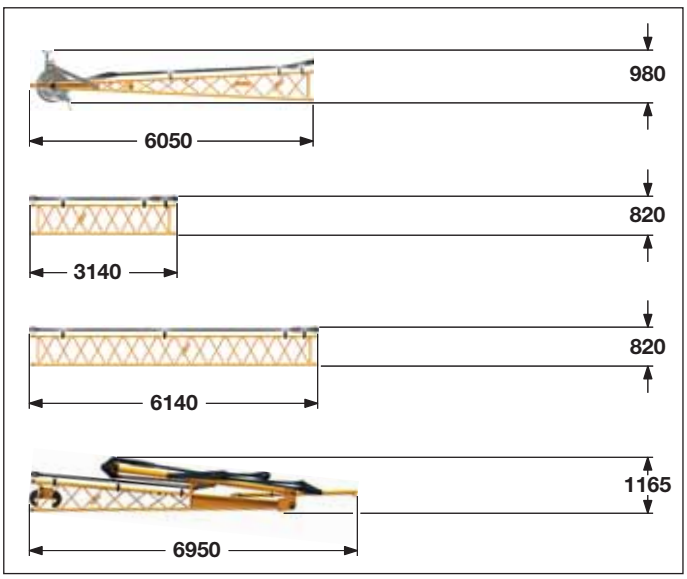

Fixed jib head (No. 0806.16)	
Width	950 mm
Weight*	450 kg

Fixed jib section (No. 0806.15)	3 m
Width	950 mm
Weight*	145 kg

Fixed jib section (No. 0806.15)	6 m
Width	950 mm
Weight*	250 kg

Fixed jib foot with A-frame (No. 0806.16)	
Width	2200 mm
Weight*	1010 kg

*) Including pendant straps

Transport dimensions and weights

Luffing jib (No. 1713.xx)

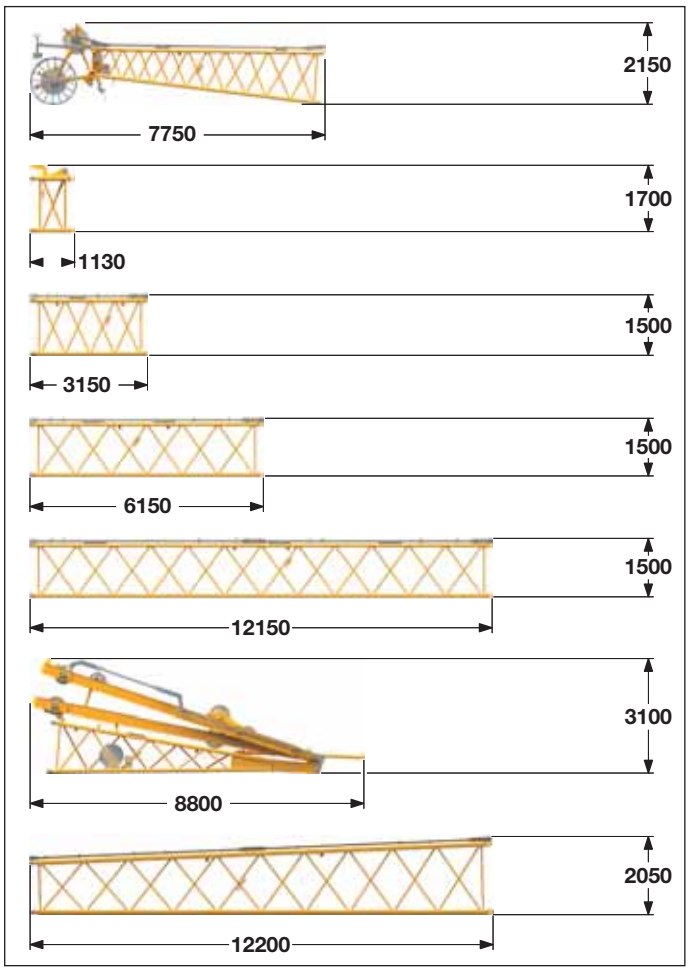

Luffing jib head (No. 1713.21)	
Width	1820 mm
Weight*	1375 kg

L-boom jib section (No. 1713.22)	1 m
Width	1820 mm
Weight*	395 kg

Luffing jib section (No. 1713.18)	3 m
Width	1820 mm
Weight*	430 kg

Luffing jib section (No. 1713.18)	6 m
Width	1820 mm
Weight*	630 kg

Luffing jib section (No. 1713.18)	12 m
Width	1820 mm
Weight*	1140 kg

Luffing jib foot with A-frames (No. 1713.22)	
Width	2450 mm
Weight*	4620 kg

Boom section tapered (No. 1713.22)	12 m
Width	2140 mm
Weight*	1490 kg

Fixed jib (No. 1008.xx)

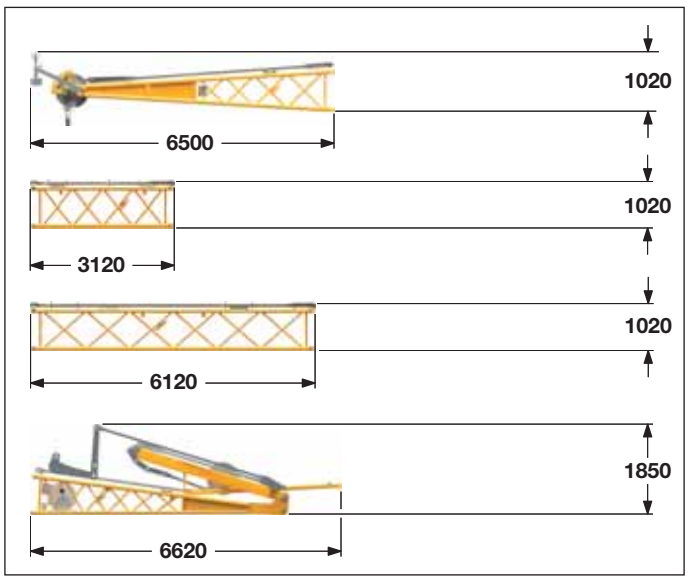

Fixed jib head (No. 1008.20)	
Width	1090 mm
Weight*	920 kg

Fixed jib section (No. 1008.17)	3 m
Width	1090 mm
Weight*	300 kg

Fixed jib section (No. 1008.17)	6 m
Width	1090 mm
Weight*	455 kg

Fixed jib foot with A-frame (No. 1008.20)	
Width	2200 mm
Weight*	1950 kg

*) Including pendant straps

Transport dimensions and weights

Counterweight

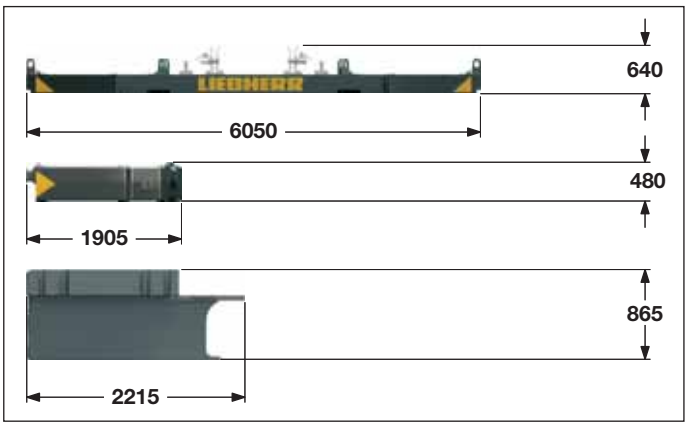

Counterweight	1 x
Width	1360 mm
Weight	12000 kg

Counterweight	10 x
Width	1350 mm
Weight	5000 kg

Carbody counterweight	2 x
Width	3030 mm
Weight	10000 kg

Mid fall

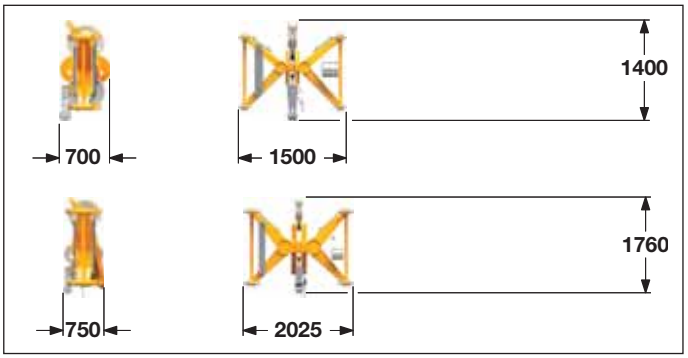

Mid fall section (No. 1309.32)	0.35 m
Width	700 mm
Weight	270 kg

Mid fall section (No. 1713.31)	0.5 m
Width	700 mm
Weight	385 kg

Hooks

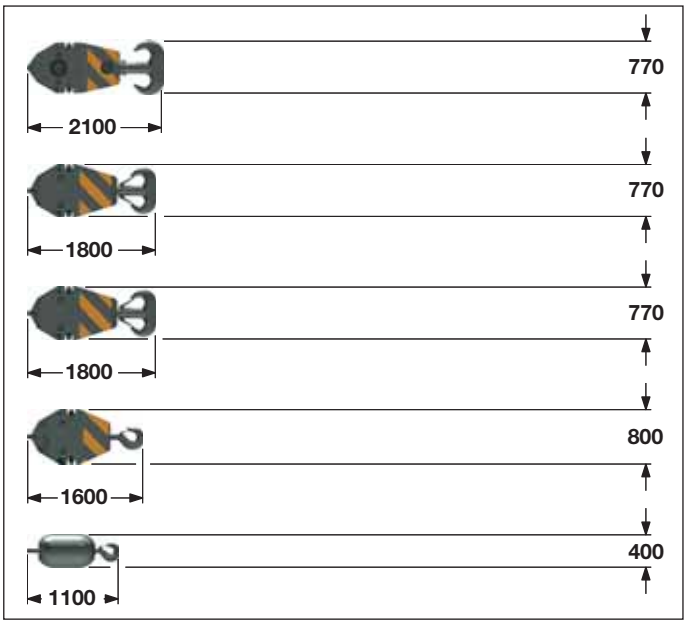

160 t hook block – 7 sheaves			
Width	640	760	880 mm
Weight	1500	2250	3000 kg

100 t hook block – 5 sheaves			
Width	540	640	700 mm
Weight	1300	1800	2300 kg

80 t hook block – 3 sheaves			
Width	360	460	560 mm
Weight	1000	1500	2000 kg

40 t hook block – 1 sheave			
Width	300	400	500 mm
Weight	700	1100	1500 kg

12.5 t single hook	
Width	400 mm
Weight	600 kg

Technical description

Engine

Power rating according to ISO 9249, 270 kW (362 hp) at 2000 rpm
Engine type — Liebherr D 936 A7 SCR
Fuel tank — 800 l capacity with continuous level indicator and reserve warning
Engine complies with NRMM exhaust certification EPA/CARB Tier 4i or 97/68 EC Stage IIIB.

Hydraulic system

A double axial displacement pump supplies the open loop hydraulic system, allowing all functions to be operated simultaneously. To minimize peak pressure an automatic working pressure cut–off is integrated in the pump.
All filters are electronically monitored.
The use of synthetic environmentally friendly (biodegradable) oils is possible.
Working pressure — max. 350 bar
Oil tank capacity — 650 l

Luffing jib winch

Line pull — max. 105 kN
Rope diameter — 20 mm
Jib luffing — 46 sec. from 15° to 78°

Boom winch

Line pull — max. 217 kN
Rope diameter — 24 mm
Boom up — 119 sec. from 15° to 86°

Swing

Consists of rollerbearing with external teeth, swing drive with fixed axial piston hydraulic motor, spring loaded and hydraulically released multi–disc holding brake, planetary gearbox and pinion.
Both swing modes are possible – speed control or free swing.
A multi–disc holding brake acts automatically at zero swing motion.
Swing speed from 0 – 3 rpm continuously variable.

Main winches

Line pull (1st layer) — max. 175 kN
Line pull (7th layer) — 120 kN
Rope diameter — 26 mm
Drum diameter — 580 mm
Rope speed — 0 – 136 m/min
Rope capacity in 7 layers — 489 m
The winches are outstanding in their compact design and easy assembly. Propulsion is via a planetary gearbox in an oil bath. Load support by the hydraulic system; additional safety factor provided by a spring loaded, multi–disc holding brake.
The main winches use pressure controlled, variable flow hydraulic motors. This system features sensors that automatically adjust oil flow to provide max. winch speed depending on load.
Option – winch with freefall system:
Clutch and braking functions on the freefall system are provided by a compact designed, low wear and maintenance free multi–disc brake.

Crawlers

Propulsion through axial piston motor, hydraulically released spring loaded multi–disc brake, crawler tracks, hydraulic chain tensioning device.
Track pads — 1000 mm
Drive speed — 0 – 1.5 km/h

Control

The heart of the hydraulic crawler cranes is the Liebherr control system which has been developed and manufactured in-house.
It includes all control and monitoring functions and is designed to withstand extreme environmental conditions and heavy duty construction tasks. Complete machine operating data as well as warning signals and irregularities are clearly displayed on the high resolution monitor in the operator‘s cab in the required language.
The electro-hydraulic proportional control allows several movements to be performed simultaneously. This ensures that all categories of loads can be positioned with utmost precision.
Option:
- GSM/GPRS telematics module

Noise emission

Noise emissions correspond with 2000/14/EC directive on noise emission by equipment used outdoors.

Boom combinations

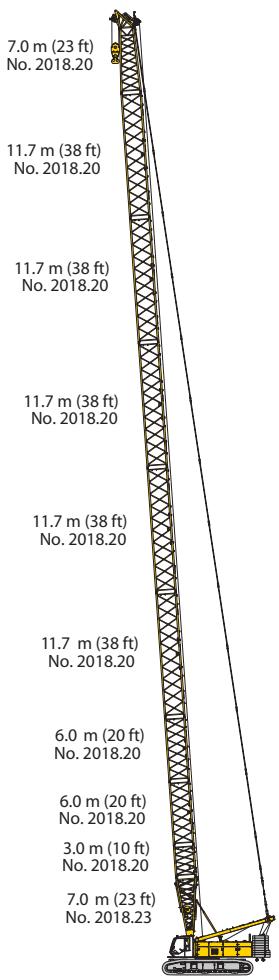

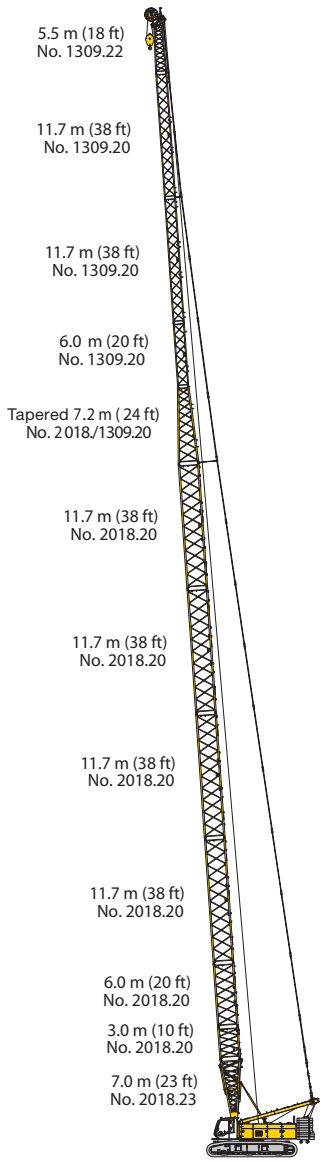

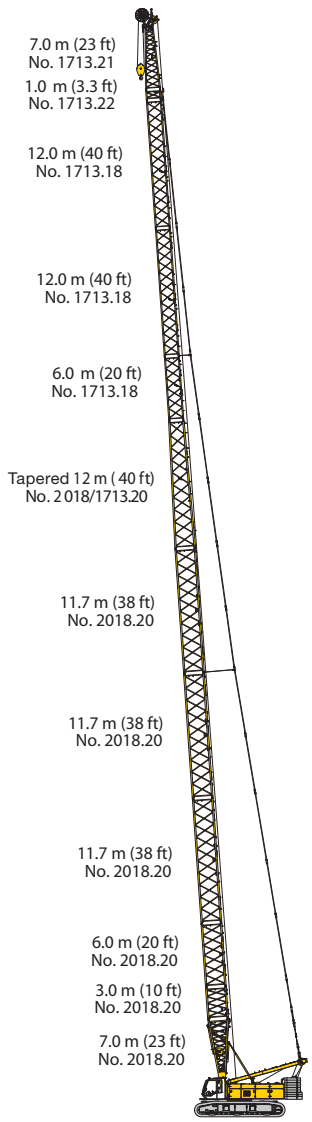

Main boom No. 2018.xx — 87.5 m

Max. combination — 104.9 m

Main boom No. 2018.xx — 62.8 m

Tapered No. 2018/1309.xx — 7.2 m

Luffing jib No. 1309.xx — 34.9 m

Max. combination — 101.1 m

Main boom No. 2018.xx — 51.1 m

Tapered No. 2018/1713.xx — 12 m

Luffing jib No. 1713.xx — 38 m

Boom combinations

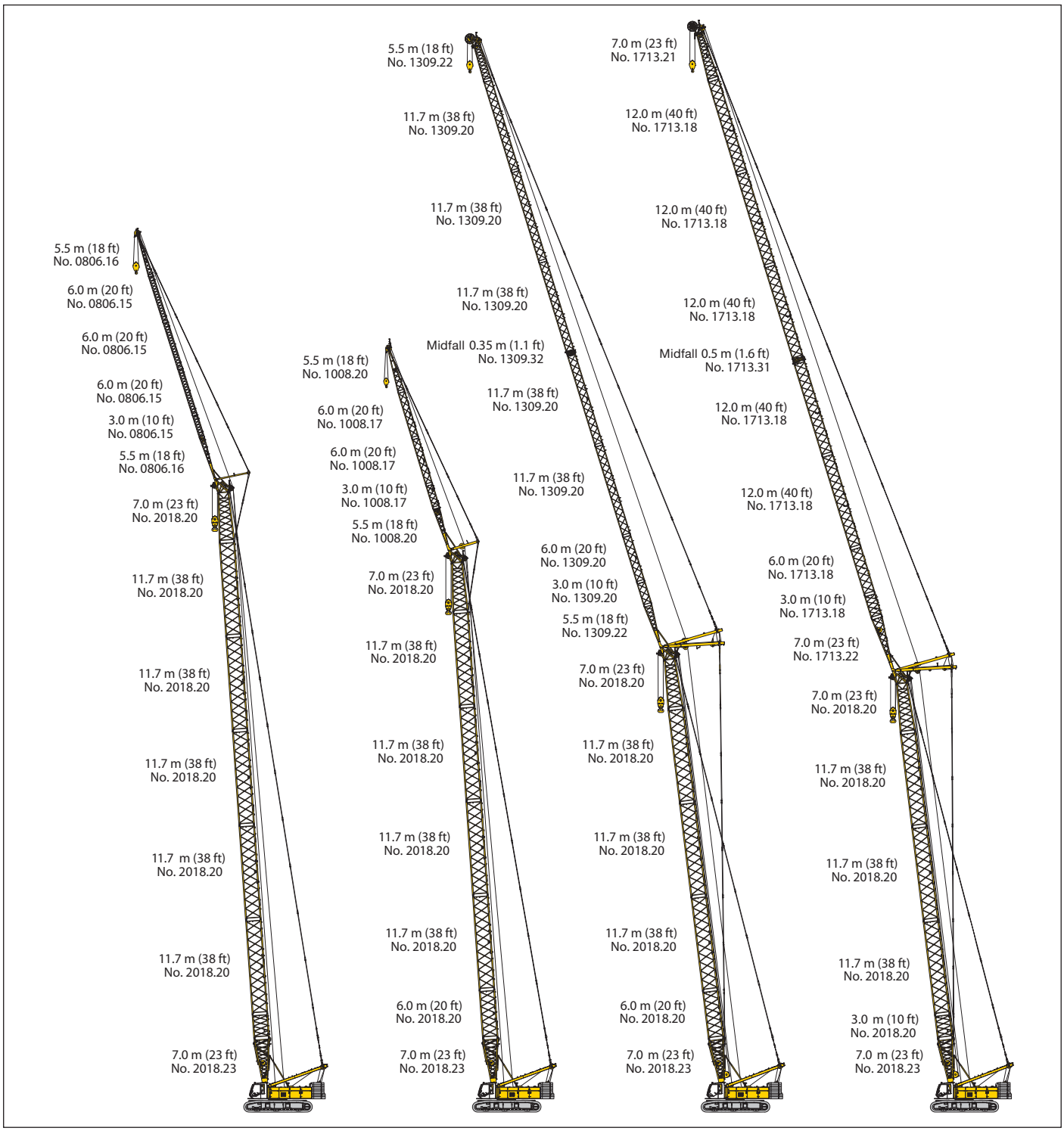

Max. combination — 107.5 m	Max. combination — 92.8 m	Max. combination — 133.6 m	Max. combination — 135.1 m
Main boom No. 2018.xx — 75.5 m	Main boom No. 2018.xx — 66.8 m	Main boom No. 2018.xx — 55.1 m	Main boom No. 2018.xx — 52.1 m
Fixed jib No. 0806.xx — 32 m	Fixed jib No. 1008.xx — 26 m	Luffing jib No. 1309.xx — 78.5 m	Luffing jib No. 1713.xx — 83 m
Main boom No. 2018.xx — 68 m	Main boom No. 2018.xx — 69.8 m	Main boom No. 2018.xx — 58.1 m	Main boom No. 2018.xx — 58.1 m
Fixed jib No. 0806.xx — 32 m	Fixed jib No. 1008.xx — 20 m	Luffing jib No. 1309.xx — 66.8 m	Luffing jib No. 1713.xx — 50 m

Self assembly system

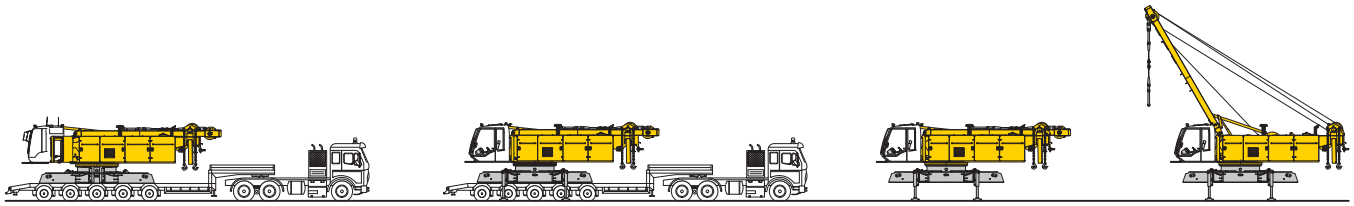

Unloading of basic machine

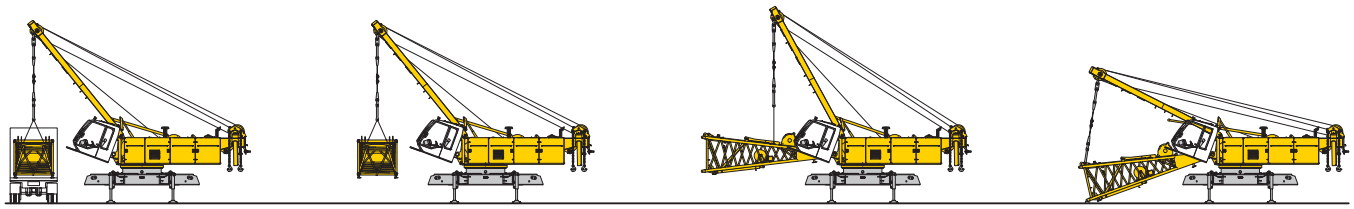

Unloading and assembly of boom foot

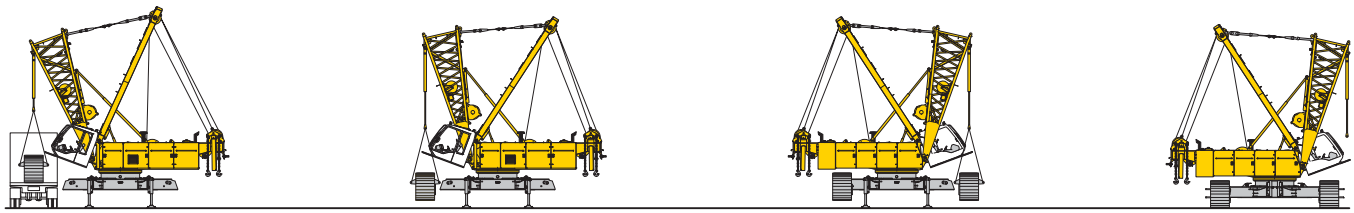

Unloading and assembly of crawlers

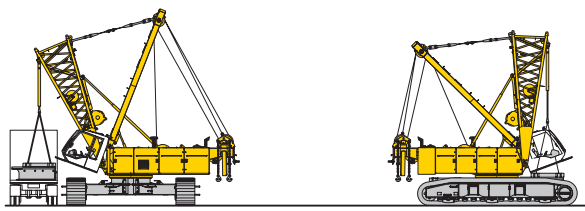

Unloading and assembly of carbody counterweight

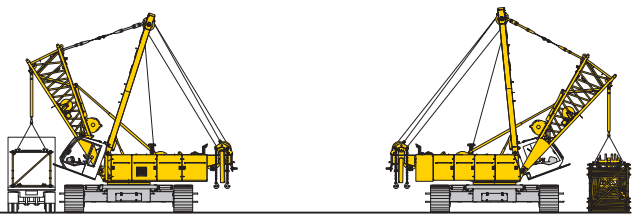

Unloading and assembly of boom

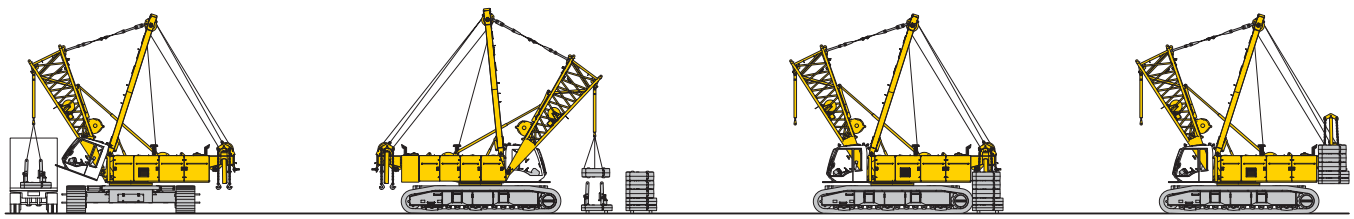

Unloading and assembly of counterweight

Erecting of main boom to working position

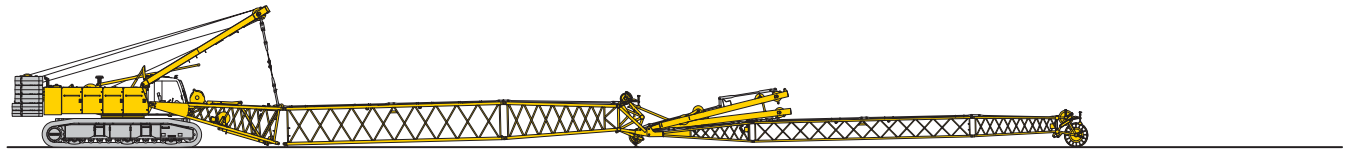

Assembly of boom

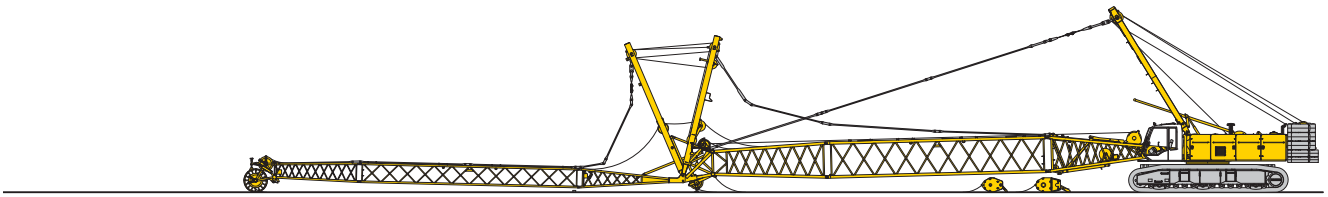

Reeving of hoist and luffing jib ropes

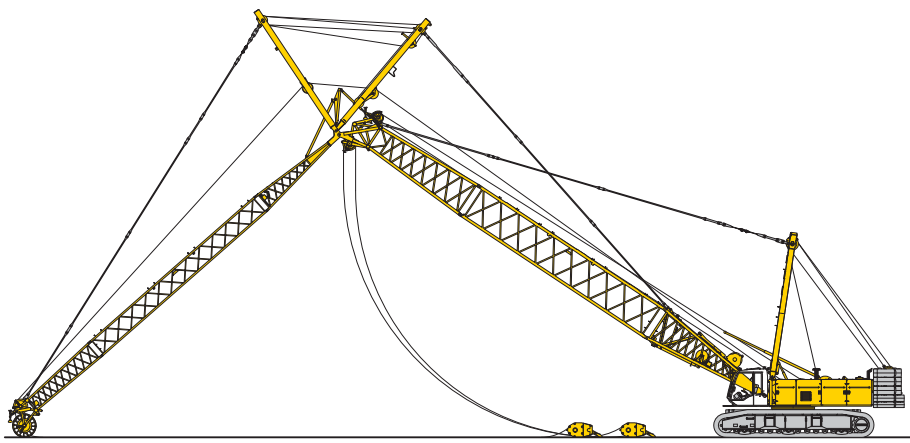

Erecting of main boom and luffing jib

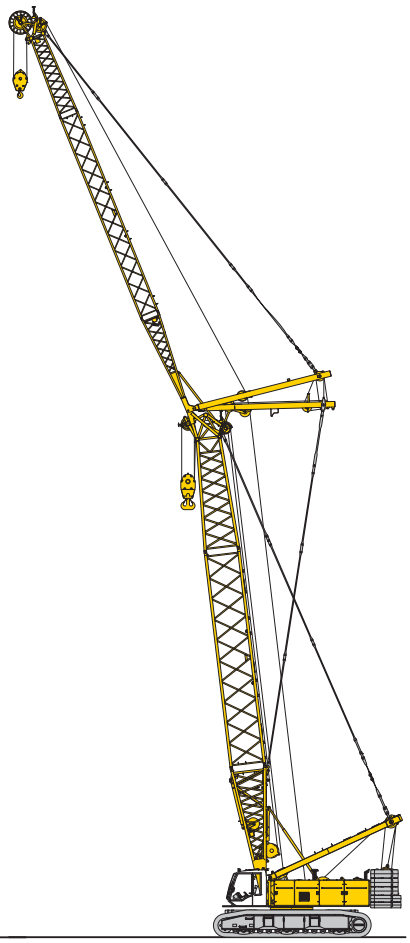

Working position

Working range - main boom (No. 2018.xx) 86° – 15°

62.3 t counterweight and 20 t carbody counterweight

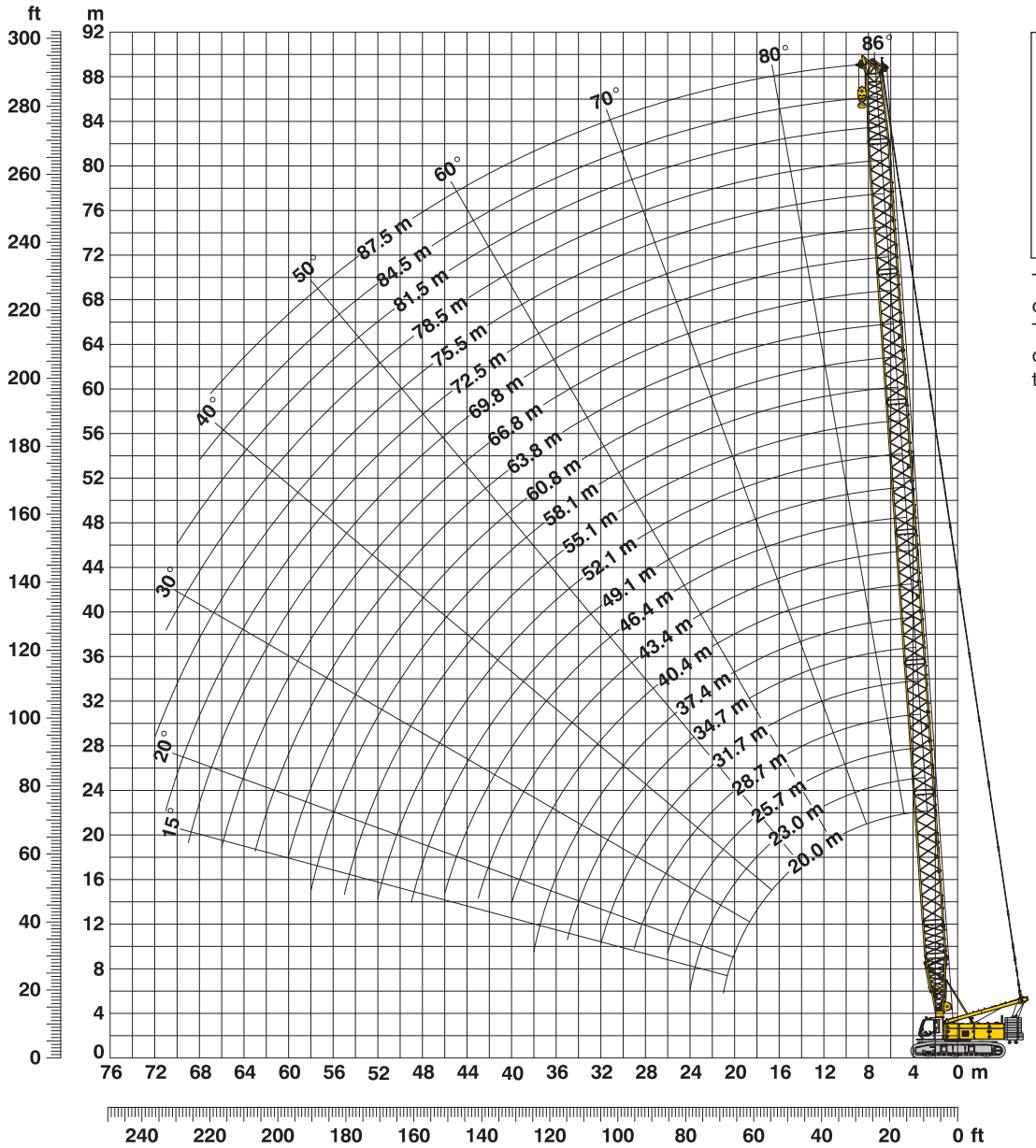

Auxiliary jib 24 t

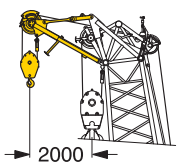

The maximum capacity of the auxiliary jib is 24 t. The corresponding load chart is programmed in the LMI system.

Main boom configuration (Table 1 – No. 2018.xx)

Configuration for boom lengths (20 m - 87.5 m)

	Length	Amount of boom extensions																							
Boom foot	7 m	1	1	1	1	1	1	1	1	1	1	1	1	1	1	1	1	1	1	1	1	1	1	1	1
Boom insert	3 m		1		1		1		1		1		1		1		1		1		1		1		1
Boom insert	6 m	1	1			1	1			1	1			1	1			1	1			1	1	2	2
Boom insert	11.7 m			1	1	1	1	2	2	2	2	3	3	3	3	4	4	4	4	5	5	5	5	5	5
Boom head	7 m	1	1	1	1	1	1	1	1	1	1	1	1	1	1	1	1	1	1	1	1	1	1	1	1
Boom length (m)		20	23	25.7	28.7	31.7	34.7	37.4	40.4	43.4	46.4	49.1	52.1	55.1	58.1	60.8	63.8	66.8	69.8	72.5	75.5	78.5	81.5	84.5	87.5

Lift chart for main boom (No. 2018.xx)

62.3 t counterweight and 20 t carbody counterweight

Capacities in metric tonnes for boom lengths (20 m - 87.5 m) - with 120 kN winches

	Boom length in (m)												
Radius	**20**	**28.7**	**34.7**	**40.4**	**46.4**	**52.1**	**58.1**	**63.8**	**69.8**	**75.5**	**81.5**	**87.5**	**Radius**
(m)	t	t	t	t	t	t	t	t	t	t	t	t	(m)
3.9	160.0*												
4.5	137.2	137.2											4.5
5	137.2	136.6	126.4										5
6	137.2	132.0	122.7	105.1	86.4								6
7	125.4	117.5	110.4	99.5	83.4	69.7	58.0	46.7					7
8	111.7	101.4	95.3	90.1	79.0	66.9	56.4	46.4	37.9	31.6			8
9	96.5	88.6	83.7	79.5	73.6	64.0	54.1	44.9	37.1	31.4	26.1	21.9	9
10	84.5	78.5	74.6	71.1	67.7	60.9	51.9	43.4	36.0	30.6	25.5	21.7	10
12	64.9	63.8	61.0	58.5	56.0	53.8	47.5	39.8	33.8	29.1	24.2	20.7	12
14	52.4	52.4	51.4	49.5	47.6	45.8	43.1	36.1	31.7	27.7	23.0	19.6	14
16	43.8	43.7	43.5	42.8	41.2	39.7	38.3	33.2	29.6	26.3	21.7	18.4	16
18	37.4	37.3	37.2	37.0	36.1	34.9	33.7	30.4	27.7	25.0	20.6	17.3	18
20	32.4	32.5	32.3	32.1	31.9	31.1	29.9	27.7	25.7	23.8	19.6	16.4	20
22		28.6	28.4	28.3	28.0	27.8	26.9	25.4	23.8	22.5	18.7	15.6	22
24		25.5	25.3	25.1	24.9	24.6	24.3	23.5	22.2	21.3	17.7	14.9	24
26		22.9	22.7	22.6	22.3	22.0	21.7	21.3	20.5	19.7	16.8	14.1	26
28		20.7	20.5	20.4	20.1	19.9	19.6	19.3	18.7	18.0	16.0	13.3	28
30			18.7	18.5	18.2	18.0	17.7	17.4	17.1	16.4	15.2	12.9	30
32			17.1	16.9	16.6	16.4	16.1	15.8	15.5	15.1	14.3	12.4	32
34			15.6	15.5	15.2	15.0	14.7	14.4	14.1	13.8	13.1	11.9	34
36				14.3	14.0	13.8	13.5	13.2	12.9	12.6	12.0	11.3	36
38				13.2	12.9	12.7	12.4	12.1	11.8	11.5	11.0	10.3	38
40				12.2	12.0	11.8	11.5	11.2	10.9	10.6	10.1	9.5	40
42					11.1	10.9	10.6	10.3	10.0	9.7	9.3	8.7	42
44					10.3	10.1	9.8	9.5	9.2	8.9	8.6	8.0	44
46					9.5	9.4	9.1	8.8	8.5	8.2	7.9	7.3	46
48						8.7	8.4	8.1	7.8	7.5	7.2	6.7	48
50						8.1	7.8	7.5	7.2	6.9	6.6	6.2	50
55							6.5	6.2	5.9	5.6	5.3	4.9	55
60								5.1	4.8	4.5	4.2	3.8	60
65									3.9	3.6	3.3	2.9	65
70										2.8	2.5	2.2	70
75										2.1			75

TLT 10576404 - M118422

Above lift chart is for reference only. For actual lift duty please refer to lift chart in operator‘s cab or manual.
*) Capacities over 140 t require a special heavy duty boom head.

L-boom high reach (No. 2018/1309.xx) 66.8 m – 104.9 m

Working range 86° – 15°

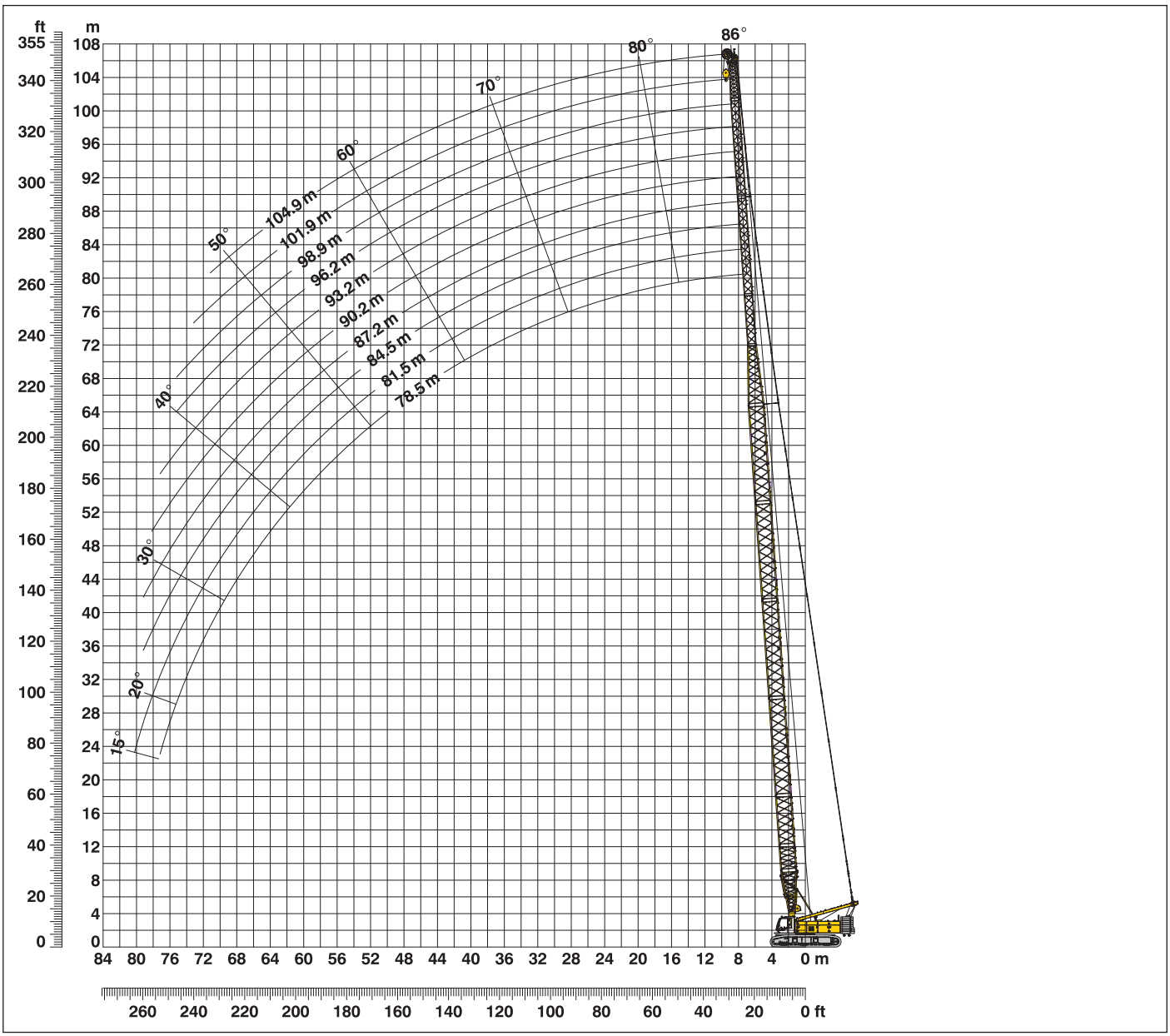

L-boom configuration with 51.1 m main boom (No. 2018.xx/1309.xx)

Configuration for L-boom lengths (66.8 m - 96.2 m)

	Length	Amount of boom and luffing jib extensions										
Boom foot	7 m	1	1	1	1	1	1	1	1	1	1	1
Boom insert	3 m	1	1	1	1	1	1	1	1	1	1	1
Boom insert	6 m	1	1	1	1	1	1	1	1	1	1	1
Boom insert	11.7 m	3	3	3	3	3	3	3	3	3	3	3
Tapered	7.2 m	1	1	1	1	1	1	1	1	1	1	1
Luffing insert	3 m	1		1		1		1		1		1
Luffing insert	6 m		1	1			1	1			1	1
Luffing insert	11.7 m				1	1	1	1	2	2	2	2
Luffing jib head	5.5 m	1	1	1	1	1	1	1	1	1	1	1
Max. L-boom length (m)		66.8	69.8	72.8	75.5	78.5	81.5	84.5	87.2	90.2	93.2	96.2

Lift chart for L-boom (No. 2018/1309.xx)

Main boom length 51.1 m

Capacities in metric tonnes
62.3 t counterweight and 20 t carbody counterweight

	Boom length in (m)				
Radius	**66.8**	**78.5**	**84.5**	**90.2**	**96.2**
(m)	t	t	t	t	t
6.7	41.7				
8	41.1	23.4			
9	40.0	22.7	16.9	12.6	8.8
10	39.0	21.9	16.2	12.3	8.7
12	36.3	20.2	14.9	11.5	8.1
14	32.9	18.8	13.7	10.6	7.6
16	28.5	17.5	12.6	9.8	7.2
18	25.1	16.4	11.8	9.1	6.8
20	22.4	15.4	10.9	8.5	6.4
22	20.0	14.6	10.3	7.8	6.1
24	18.7	13.7	9.7	7.5	5.8
26	17.4	13.0	9.2	7.1	5.5
28	16.2	12.4	8.7	6.7	5.3
30	15.1	11.9	8.3	6.4	5.0
32	14.0	11.3	7.9	6.1	4.8
34	12.8	10.8	7.4	5.8	4.5
36	12.0	10.4	7.2	5.5	4.3
38	11.3	9.9	7.0	5.2	4.0
40	10.5	9.5	6.7	5.0	3.8
42	9.8	9.0	6.5	4.8	3.7
44	9.1	8.5	6.3	4.6	3.5
46	8.6	8.0	6.1	4.4	3.4
48	8.1	7.5	6.0	4.3	3.3
50	7.6	7.0	5.8	4.2	3.2
55	6.5	6.1	5.3	3.8	2.9
60	5.6	5.1	4.7	3.6	2.7
65	4.8	4.5	4.0	3.3	2.6
70		3.8	3.4	3.0	2.4
75		3.2	2.8	2.6	2.2
80			2.4	2.2	

TLT 10576404 - M118422

Main boom length 62.8 m

Capacities in metric tonnes
62.3 t counterweight and 20 t carbody counterweight

	Boom length in (m)				
Radius	**78.5**	**84.5**	**90.2**	**96.2**	**104.9**
(m)	t	t	t	t	t
7.5	29.8				
8	29.8	23.8			
9	29.2	23.7	18.4	13.7	
10	28.5	23.1	18.0	13.6	9.9
12	27.1	21.9	16.8	12.6	9.5
14	25.9	20.9	15.8	11.7	8.9
16	24.1	19.9	14.9	11.0	8.4
18	21.9	19.1	14.0	10.2	7.9
20	19.9	18.2	13.2	9.7	7.4
22	18.0	17.0	12.5	9.1	7.0
24	16.1	15.5	12.0	8.6	6.6
26	14.7	14.1	11.4	8.2	6.3
28	13.8	13.0	10.9	7.9	6.1
30	13.0	12.2	10.5	7.5	5.9
32	12.1	11.5	10.0	7.2	5.7
34	11.3	10.8	9.6	6.9	5.5
36	10.6	10.1	9.2	6.6	5.2
38	9.8	9.4	8.7	6.3	5.0
40	9.0	8.8	8.2	6.0	4.8
42	8.5	8.1	7.6	5.9	4.6
44	8.0	7.5	7.1	5.7	4.4
46	7.5	7.1	6.5	5.5	4.3
48	6.9	6.7	6.1	5.4	4.2
50	6.4	6.2	5.8	5.2	4.1
55	5.6	5.2	4.8	4.5	3.7
60	4.6	4.5	4.0	3.8	3.2
65	4.0	3.7	3.4	3.2	2.7
70	3.3	3.2	2.7	2.6	2.2
75	2.8	2.6	2.3	2.1	
80		2.1			

TLT 10576404 - M118422

Above lift chart is for reference only. For actual lift duty please refer to lift chart in operator‘s cab or manual.

L-boom configuration with 62.8 m main boom (No. 2018.xx/1309.xx)

Configuration for L-boom lengths (78.5 m - 104.9 m)

	Length	Amount of boom and luffing jib extensions									
Boom foot	7 m	1	1	1	1	1	1		1	1	1
Boom insert	3 m	1	1	1	1	1	1	1	1	1	1
Boom insert	6 m	1	1	1	1	1	1	1	1	1	1
Boom insert	11.7 m	4	4	4	4	4	4	4	4	4	4
Tapered	7.2 m	1	1	1	1	1	1	1	1	1	1
Luffing insert	3 m	1		1		1		1		1	
Luffing insert	6 m		1	1			1	1			1
Luffing insert	11.7 m				1	1	1	1	2	2	2
Luffing jib head	5.5 m	1	1	1	1	1	1	1	1	1	1
Max. L-boom length (m)		78.5	81.5	84.5	87.2	90.2	93.2	96.2	98.9	101.1	104.9

L-boom high reach (No. 2018/1713.xx) 74.1 m – 101.1 m

Working range 86° – 15°

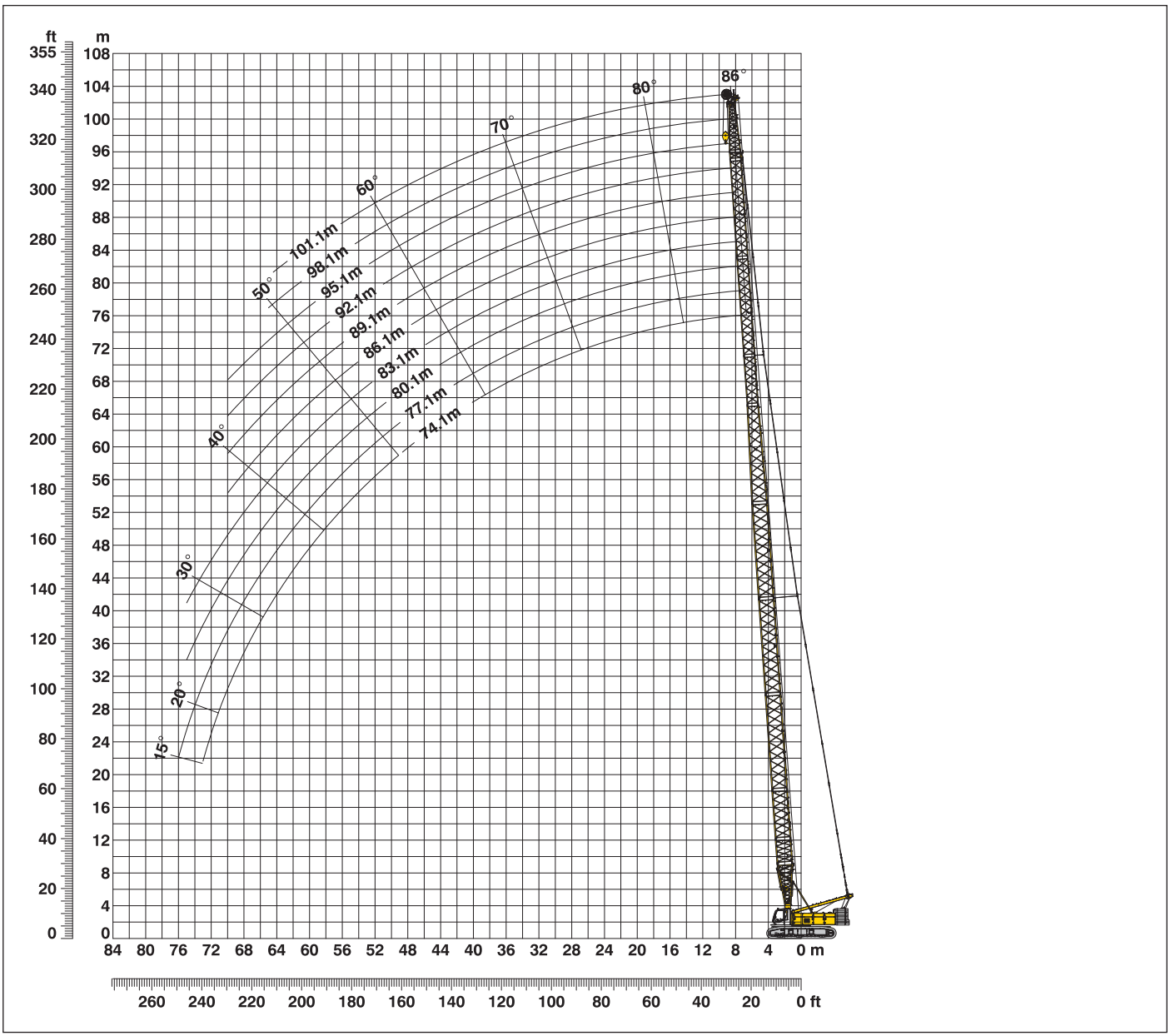

L-boom configuration with 51.1 m main boom (No. 2018.xx/1713.xx)

Configuration for L-boom lengths (74.1 m - 101.1 m)

	Length	Amount of boom and luffing jib extensions									
Boom foot	7 m	1	1	1	1	1	1	1	1	1	1
Boom insert	3 m	1	1	1	1	1	1	1	1	1	1
Boom insert	6 m	1	1	1	1	1	1	1	1	1	1
Boom insert	11.7 m	3	3	3	3	3	3	3	3	3	3
Tapered	12 m	1	1	1	1	1	1	1	1	1	1
Luffing insert	3 m	1		1		1		1		1	
Luffing insert	6 m		1	1			1	1			1
Luffing insert	12 m				1	1	1	1	2	2	2
Luffing insert	1 m	1	1	1	1	1	1	1	1	1	1
Luffing jib head	7 m	1	1	1	1	1	1	1	1	1	1
Max. L-boom length (m)		74.1	77.1	80.1	83.1	86.1	89.1	92.1	95.1	98.1	101.1

Lift chart for L-boom (No. 2018/1713.xx)

Main boom length 51.1 m

Capacities in metric tonnes for boom lengths (74.1 m - 101.1 m) - with 120 kN winches
62.3 t counterweight and 20 t carbody counterweight

	Boom length in (m)										
Radius	**74.1**	**77.1**	**80.1**	**83.1**	**86.1**	**89.1**	**92.1**	**95.1**	**98.1**	**101.1**	**Radius**
(m)	t	t	t	t	t	t	t	t	t	t	(m)
7.2	34.7										7.2
8	34.7	30.8	28.3	25.4							8
9	34.1	30.3	28.0	25.3	23.0	20.5	18.7	16.5	14.9		9
10	33.2	29.6	27.3	24.8	22.4	20.1	18.4	16.3	14.8	13.2	10
12	31.5	28.1	26.0	23.6	21.0	19.1	17.4	15.5	14.0	12.5	12
14	29.6	26.5	24.6	22.2	19.8	18.0	16.5	14.6	13.3	11.8	14
16	26.7	24.6	23.0	20.9	18.7	17.1	15.6	13.8	12.5	11.2	16
18	23.5	22.4	21.3	19.7	17.7	16.2	14.8	13.0	11.8	10.7	18
20	21.2	20.6	19.8	18.6	16.6	15.4	14.1	12.4	11.2	10.1	20
22	19.0	18.5	18.0	17.3	15.6	14.6	13.3	11.8	10.7	9.6	22
24	16.9	16.5	16.2	15.8	14.5	13.7	12.7	11.2	10.2	9.1	24
26	15.9	15.1	14.5	14.3	13.4	12.8	12.0	10.9	9.9	8.7	26
28	14.9	14.1	13.7	13.3	12.4	11.9	11.3	10.5	9.5	8.4	28
30	13.9	13.2	12.8	12.5	11.7	11.2	10.6	10.1	9.2	8.1	30
32	13.0	12.2	12.0	11.8	11.0	10.5	10.1	9.6	8.9	7.8	32
34	12.1	11.5	11.2	11.0	10.2	9.9	9.5	9.1	8.5	7.5	34
36	11.2	10.7	10.5	10.3	9.6	9.2	8.9	8.6	8.1	7.3	36
38	10.3	10.0	9.7	9.6	8.9	8.7	8.3	8.1	7.7	7.1	38
40	9.6	9.2	8.9	9.0	8.3	8.1	7.8	7.6	7.2	6.8	40
42	9.0	8.7	8.2	8.3	7.7	7.5	7.3	7.1	6.8	6.5	42
44	8.5	8.2	7.8	7.7	7.1	7.0	6.7	6.6	6.3	6.1	44
46	7.9	7.6	7.3	7.2	6.6	6.4	6.2	6.1	5.9	5.7	46
48	7.3	7.1	6.8	6.8	6.2	6.0	5.7	5.6	5.4	5.3	48
50	6.9	6.5	6.3	6.3	5.8	5.6	5.4	5.2	5.0	4.8	50
55	5.9	5.7	5.4	5.3	4.8	4.7	4.5	4.4	4.2	4.0	55
60	5.0	4.7	4.6	4.5	4.1	3.9	3.7	3.6	3.4	3.3	60
65	4.2	4.1	3.8	3.8	3.4	3.3	3.1	3.0	2.8	2.6	65
70	3.5	3.3	3.2	3.2	2.8	2.7	2.4	2.4	2.2	2.1	70
75		2.8	2.6	2.6	2.3	2.2					75
80				2.1							80

TLT 10576404 - M118422

Above lift chart is for reference only. For actual lift duty please refer to lift chart in operator‘s cab or manual.

Working range - luffing jib (No. 1309.xx) 78° - 15°

Main boom 88° - 45°

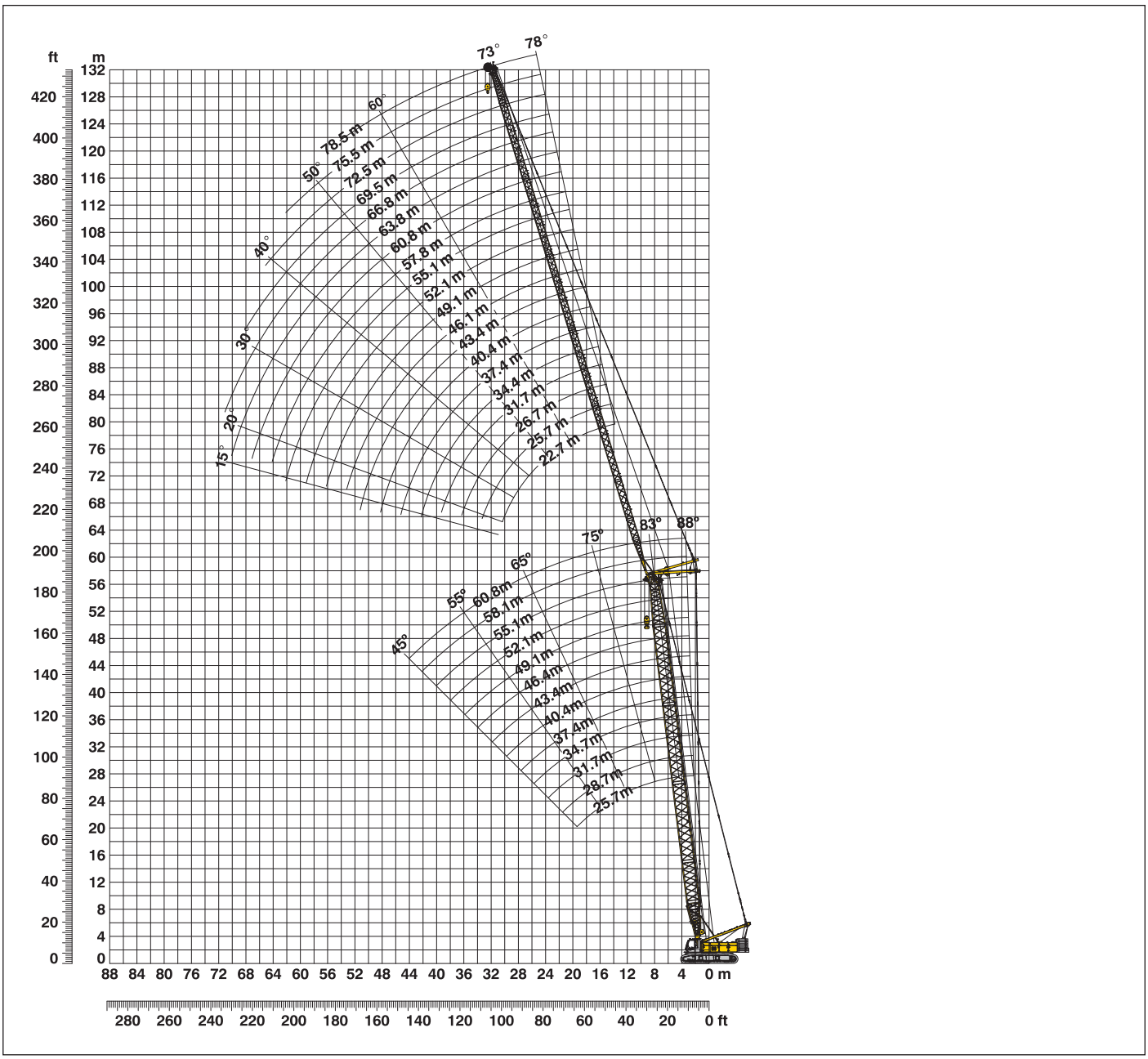

Boom configuration for main boom lengths (25.7 m - 60.8 m) - see table 1 on page 12

Jib configuration for jib lengths (22.7 m - 78.5 m)

	Length	Amount of luffing jib extensions																			
Luffing jib foot	5.5 m	1	1	1	1	1	1	1	1	1	1	1	1	1	1	1	1	1	1	1	1
Luffing jib insert	3 m		1		1		1		1		1		1		1		1		1		1
Luffing jib insert	6 m			1	1			1	1			1	1			1	1			1	1
Luffing jib insert	11.7 m	1	1	1	1	2	2	2	2	3	3	3	3	4	4	4	4	5	5	5	5
Luffing jib head	5.5 m	1	1	1	1	1	1	1	1	1	1	1	1	1	1	1	1	1	1	1	1
Luffing jib length (m)		22.7	25.7	28.7	31.7	34.4	37.4	40.4	43.4	46.1	49.1	52.1	55.1	57.8	60.8	63.8	66.8	69.5	72.5	75.5	78.5

Lift chart - luffing jib (No. 1309.xx)

Main boom 88°

Main boom 25.7 m

Radius	Jib length in (m)							
	22.7	28.7	34.4	40.4	49.1	55.1	69.5	78.5
(m)	t	t	t	t	t	t	t	t
8.6	47.4							
10	46.8	35.4						
11	44.2	34.5	27.1					
13	37.6	32.7	26.1	20.8				
15	31.6	29.4	24.8	19.9	13.6			
16	28.6	27.0	24.4	19.3	13.3	10.7		
19	22.3	21.2	20.1	17.6	12.3	10.0	6.0	
22	17.6	16.9	16.5	15.4	11.5	9.3	5.7	3.6
30		11.6	10.9	10.5	9.3	8.2	5.1	3.1
36			9.0	8.6	7.7	7.1	4.7	2.7
42				7.1	6.4	6.0	4.3	2.5
50					5.0	4.7	3.7	2.2
55						4.0	3.0	2.0
65							2.1	

Main boom 37.4 m

Radius	Jib length in (m)							
	22.7	28.7	34.4	40.4	49.1	55.1	69.5	78.5
(m)	t	t	t	t	t	t	t	t
9	39.8							
11	37.4	30.2						
12	34.3	29.4	23.6					
13	31.6	28.0	23.1	18.3				
15	27.3	25.3	22.0	17.6	12.4			
16	25.0	23.2	21.5	17.2	12.2	9.8		
19	20.0	18.8	17.6	15.9	11.4	9.3	5.6	
22	16.2	15.2	14.6	13.1	10.7	8.7	5.3	3.5
30		10.8	10.1	9.5	8.4	7.8	4.8	2.9
36			8.4	7.7	6.9	6.4	4.4	2.6
40				6.9	6.1	5.7	4.1	2.5
50					4.6	4.3	3.3	2.1
55						3.7	2.7	
60							2.2	

Main boom 43.4 m

Radius	Jib length in (m)							
	22.7	28.7	34.4	40.4	49.1	55.1	69.5	78.5
(m)	t	t	t	t	t	t	t	t
9.2	35.1							
11	33.3	27.5						
12	30.5	26.8	21.7					
13	28.2	25.6	21.4	16.9				
15	24.1	22.7	20.0	16.3	11.7			
16	22.4	20.9	19.3	16.0	11.6	9.3		
19	18.2	17.1	16.1	15.0	10.8	8.9	5.3	
22	15.1	14.0	13.6	12.3	10.2	8.3	5.1	3.4
26	12.5	11.7	10.9	10.1	9.0	7.8	4.8	3.1
32		9.4	9.0	8.1	7.3	6.9	4.5	2.8
36			8.0	7.3	6.4	6.0	4.3	2.6
42				6.1	5.4	5.0	3.7	2.4
50					4.4	4.0	3.0	2.1
55						3.4	2.4	

Main boom 55.1 m

Radius	Jib length in (m)							
	22.7	28.7	34.4	40.4	49.1	55.1	69.5	78.5
(m)	t	t	t	t	t	t	t	t
9.6	26.3							
11	25.3	21.4						
13	22.4	20.1	17.4					
14	20.7	18.8	17.0	14.0				
16	18.3	16.7	15.3	13.5	10.0			
17	17.0	15.6	14.7	12.9	9.8	8.2		
20	14.4	13.0	12.1	11.4	9.2	7.8	4.7	
22	12.9	11.6	11.2	10.1	8.8	7.5	4.5	3.0
32		7.7	7.6	6.9	6.1	5.7	4.0	2.5
38			6.0	5.9	5.1	4.6	3.6	2.3
42				5.4	4.6	4.1	3.1	2.2
44					4.4	3.9	2.8	2.0
50					3.7	3.3	2.3	
55						2.9		

Main boom 58.1 m

Radius	Jib length in (m)							
	22.7	28.7	34.4	40.4	49.1	55.1	66.8	
(m)	t	t	t	t	t	t	t	
9.7	24.2							
11	23.2	19.1						
13	20.9	18.6	15.8					
14	19.4	17.5	15.5	13.0				
16	17.3	15.7	14.3	12.5	9.6			
17	16.1	14.7	13.7	12.0	9.4	7.8		
19	14.4	13.1	12.1	11.2	9.0	7.6	4.7	
22	12.1	11.0	10.4	9.7	8.4	7.2	4.4	
26	10.3	9.4	8.6	8.1	7.1	6.5	4.2	
32		7.9	7.3	6.6	5.8	5.4	3.8	
38			6.0	5.7	4.9	4.4	3.4	
42				5.2	4.3	3.9	2.9	
50					3.6	3.1	2.2	
55						2.7		

Main boom 60.8 m

Radius	Jib length in (m)							
	22.7	28.7	34.4	40.4	49.1			
(m)	t	t	t	t	t			
9.8	22.4							
12	20.5	18.0						
13	19.5	17.4	15.2					
14	18.3	16.4	14.7	11.0				
16	16.4	14.8	13.4	10.3	8.2			
17	15.4	13.8	12.9	10.1	8.0			
18	14.5	13.1	12.2	9.9	7.8			
20	13.1	11.7	10.9	9.4	7.5			
22	11.9	10.4	9.9	8.7	7.3			
26	10.2	9.0	8.3	7.5	6.5			
32		7.6	7.0	6.2	5.4			
38			5.7	5.2	4.5			
44				4.3	3.8			
50					3.3			

TLT 10576404 - M118422

Capacities in metric tonnes with luffing jib (No. 1309.xx), 62.3 t counterweight + 20 t carbody counterweight. Above lift chart is for reference only. For actual lift duty and complete chart with all available configurations please refer to lift chart in operator's cab or manual.

Lift chart - luffing jib (No. 1309.xx)

Main boom 83°

Main boom 25.7 m

Radius	Jib length in (m)							
	22.7	28.7	34.4	40.4	49.1	55.1	69.5	78.5
(m)	t	t	t	t	t	t	t	t
12.8	44.1							
15	39.9	32.4						
17	36.0	30.8	24.6					
18	32.5	29.8	24.0	18.9				
22	22.8	23.0	21.8	17.4	11.9			
24	19.2	19.6	19.5	16.5	11.4	9.2		
28	12.1	15.8	15.7	14.7	10.7	8.7	5.4	
32		13.2	13.1	13.0	10.1	8.3	5.1	3.1
38			10.2	10.3	9.2	7.6	4.7	2.7
44				8.2	7.9	6.9	4.3	2.5
50					6.5	6.2	4.0	2.3
55						5.3	3.7	2.1
60							3.4	2.0
70							2.5	

Main boom 37.4 m

Radius	Jib length in (m)							
	22.7	28.7	34.4	40.4	49.1	55.1	69.5	78.5
(m)	t	t	t	t	t	t	t	t
14.2	36.7							
16	34.0	27.9						
18	30.4	26.9	21.5					
20	25.6	24.5	20.8	16.5				
22	22.0	21.9	19.7	15.8	11.1			
24	19.1	18.7	18.9	15.1	10.8	8.7		
28	15.4	15.0	14.7	13.5	10.2	8.3	5.1	
34		11.8	11.6	11.1	9.3	7.8	4.8	2.9
38			10.1	9.6	8.7	7.3	4.5	2.7
46				7.2	7.0	6.4	4.1	2.4
50					6.2	5.8	3.9	2.2
55						5.1	3.6	2.1
60						4.2	3.3	
70							2.4	

Main boom 43.4 m

Radius	Jib length in (m)							
	22.7	28.7	34.4	40.4	49.1	55.1	69.5	78.5
(m)	t	t	t	t	t	t	t	t
14.9	31.1							
17	28.5	24.8						
19	25.8	23.2	19.6					
22	20.7	20.2	18.0	14.9				
24	18.3	17.5	16.7	14.3	10.3			
26	16.2	15.5	15.3	13.6	10.0	8.2		
30	12.0	13.1	12.8	11.9	9.6	7.8	4.9	
32		12.3	11.8	10.9	9.4	7.7	4.7	3.0
34		11.4	11.0	10.3	8.9	7.5	4.6	2.9
40			9.0	8.5	7.8	6.9	4.3	2.6
46				7.0	6.5	6.1	4.0	2.4
55					4.9	4.8	3.4	2.1
60						4.0	3.1	
70							2.2	

Main boom 55.1 m

Radius	Jib length in (m)							
	22.7	28.7	34.4	40.4	49.1	55.1	69.5	78.5
(m)	t	t	t	t	t	t	t	t
16.4	21.5							
19	19.2	17.2						
20	18.4	16.5	14.6					
22	16.7	15.0	13.7	12.0				
26	14.1	12.8	11.9	10.7	8.8	7.3		
30	12.2	11.1	10.4	9.7	8.2	7.1		
32		10.5	9.8	9.1	7.9	6.9	4.2	
36		9.2	8.7	8.1	7.2	6.6	4.1	2.6
42			7.3	6.9	6.2	5.7	3.8	2.3
48				5.8	5.2	4.8	3.5	2.1
50					5.0	4.6	3.4	2.0
55					4.3	4.0	3.0	
60						3.4	2.5	
65							2.0	

Main boom 58.1 m

Radius	Jib length in (m)							
	22.7	28.7	34.4	40.4	49.1	55.1	66.8	
(m)	t	t	t	t	t	t	t	
16.7	19.4							
19	17.7	15.8						
22	15.6	13.9	12.6	11.0				
26	13.4	12.0	11.0	9.9	8.2			
28	12.5	11.3	10.4	9.4	8.0	6.9		
30	11.7	10.6	9.8	9.0	7.6	6.7	4.3	
34		9.4	8.8	8.1	7.1	6.3	4.1	
36		8.9	8.3	7.7	6.7	6.1	4.0	
42			7.1	6.5	5.8	5.3	3.8	
44				6.2	5.5	5.1	3.6	
46				5.9	5.2	4.8	3.5	
50					4.7	4.3	3.3	
55					4.1	3.7	2.8	
60						3.2	2.3	

Main boom 60.8 m

Radius	Jib length in (m)							
	22.7	28.7	34.4	40.4	49.1			
(m)	t	t	t	t	t			
17.1	17.8							
19	16.6	14.4						
22	14.6	12.9	11.7					
24	13.5	11.9	10.9	9.1				
26	12.7	11.1	10.2	8.7	7.1			
28	12.0	10.6	9.7	8.3	6.9			
30	11.3	10.0	9.2	8.0	6.7			
32	9.0	9.5	8.8	7.6	6.4			
36		8.5	7.9	7.0	6.0			
38		7.6	7.6	6.6	5.7			
42			6.8	5.9	5.3			
46				5.4	4.7			
48				5.1	4.4			
55					3.7			

TLT 10576404 - M118422

Capacities in metric tonnes with luffing jib (No. 1309.xx), 62.3 t counterweight + 20 t carbody counterweight. Above lift chart is for reference only. For actual lift duty and complete chart with all available configurations please refer to lift chart in operator's cab or manual.

Lift chart - luffing jib (No. 1309.xx)

Main boom 75°

Main boom 25.7 m

Radius	Jib length in (m)							
	22.7	28.7	34.4	40.4	49.1	55.1	69.5	78.5
(m)	t	t	t	t	t	t	t	t
19.2	24.0							
22	29.3	28.6						
26	23.9	23.7	21.5					
28	21.8	21.6	20.7	16.7				
30	19.5	19.4	18.5	15.7				
32		17.5	17.0	14.9	10.7			
36		14.8	14.2	13.4	10.2	8.2		
40			12.4	11.6	9.7	7.8	4.8	
42			11.5	10.9	9.4	7.6	4.7	
44				10.3	8.9	7.4	4.5	2.6
48				9.2	8.2	7.0	4.3	2.4
55					6.9	6.2	4.0	2.2
60						5.5	3.7	2.1
75							3.0	

Main boom 37.4 m

Radius	Jib length in (m)							
	22.7	28.7	34.4	40.4	49.1	55.1	69.5	78.5
(m)	t	t	t	t	t	t	t	t
21.6	27.8							
26	23.1	22.4						
28	21.1	20.8	19.9					
30	19.4	19.2	18.8	15.2				
32	17.9	17.7	17.4	14.5				
36		15.3	15.1	13.0	10.1	8.1		
38		14.3	14.1	12.4	9.9	7.9		
42			12.4	11.0	9.6	7.6	4.6	
46				9.9	9.0	7.3	4.4	2.5
50				8.8	8.3	6.9	4.2	2.4
55					7.4	6.5	3.9	2.2
60						5.9	3.7	2.1
65						4.7	3.5	
75							3.1	

Main boom 43.4 m

Radius	Jib length in (m)							
	22.7	28.7	34.4	40.4	49.1	55.1	69.5	78.5
(m)	t	t	t	t	t	t	t	t
23.8	22.4							
28	19.9	18.9						
30	18.5	17.7	16.4					
32	17.2	16.7	15.7	13.7				
36	12.1	14.7	14.2	12.6	9.6			
38		13.7	13.5	12.1	9.5	7.5		
40		12.9	12.7	11.8	9.3	7.5		
44			11.2	10.6	8.9	7.2	4.3	
46			10.6	10.1	8.7	7.1	4.2	
48				9.6	8.4	7.0	4.1	2.4
50				9.1	8.2	6.9	4.0	2.4
60					6.6	6.0	3.6	2.1
65						5.3	3.4	
80							2.9	

Main boom 55.1 m

Radius	Jib length in (m)							
	22.7	28.7	34.4	40.4	49.1	55.1	69.5	78.5
(m)	t	t	t	t	t	t	t	t
26.9	15.2							
30	14.1	12.6						
32	13.5	12.0	10.9					
36	12.5	11.0	10.1	9.1				
38	12.1	10.4	9.7	8.8	7.4			
42		9.7	8.9	8.2	7.0	6.1		
44		9.5	8.6	7.9	6.8	6.0		
46			8.4	7.6	6.5	5.8		
48			8.2	7.3	6.3	5.6	3.6	
50			7.5	7.1	6.1	5.5	3.6	
55				6.7	5.6	5.1	3.4	2.1
60					5.3	4.7	3.2	
70						3.8	2.7	
80							2.2	

Main boom 58.1 m

Radius	Jib length in (m)							
	22.7	28.7	34.4	40.4	49.1	55.1	66.8	
(m)	t	t	t	t	t	t	t	
27.6	13.2							
32	12.3	10.8						
34	11.7	10.3	9.5					
36	11.3	9.9	9.1	8.2				
38	11.0	9.5	8.7	7.9				
40		9.1	8.4	7.6	6.5			
42		8.8	8.0	7.3	6.3	5.5		
44		8.6	7.8	7.1	6.1	5.4		
48			7.3	6.5	5.6	5.0	3.4	
50			7.1	6.3	5.5	4.8	3.3	
55				6.0	5.0	4.5	3.1	
65					4.0	3.8	2.6	
70						3.6	2.4	
80							2.0	

Main boom 60.8 m

Radius	Jib length in (m)							
	22.7	28.7	34.4	40.4	49.1			
(m)	t	t	t	t	t			
28.3	11.8							
30	11.8							
32	11.2	10.0						
34	10.8	9.5	8.7					
36	10.3	9.0	8.4	7.0				
38	10.0	8.6	8.0	6.8				
40	9.7	8.3	7.6	6.6	5.4			
42		8.0	7.3	6.3	5.3			
44		7.8	7.0	6.2	5.1			
46		7.0	6.8	5.9	5.0			
50			6.5	5.5	4.7			
55				5.1	4.3			
65					3.7			

TLT 10576404 - M118422

Capacities in metric tonnes with luffing jib (No. 1309.xx), 62.3 t counterweight + 20 t carbody counterweight. Above lift chart is for reference only. For actual lift duty and complete chart with all available configurations please refer to lift chart in operator's cab or manual.

Lift chart - luffing jib (No. 1309.xx)

Main boom 65°

Main boom 25.7 m

Radius	Jib length in (m)							
	22.7	28.7	34.4	40.4	49.1	55.1	69.5	78.5
(m)	t	t	t	t	t	t	t	t
26.8	21.7							
32	17.5	17.3						
34	16.2	16.0	15.8					
38		14.0	13.7	13.5				
40		13.1	12.7	12.7				
42			11.8	11.9	9.5			
44			11.0	11.2	9.4			
46			10.2	10.6	9.2	7.5		
48				10.0	9.0	7.4		
50				9.5	8.5	7.2		
55					7.7	6.6	4.1	
60					6.8	6.2	3.9	2.1
65						5.5	3.6	2.0
70							3.4	
75							3.3	
80							3.2	

Main boom 37.4 m

Radius	Jib length in (m)							
	22.7	28.7	34.4	40.4	49.1	55.1	69.5	78.5
(m)	t	t	t	t	t	t	t	t
31.8	16.2							
36	13.9	13.6						
38	13.0	12.7						
40	12.1	12.0	11.7					
42		11.2	11.0	10.7				
44		10.6	10.4	10.1				
46		10.0	9.8	9.5				
48			9.2	9.0	8.6			
50			8.8	8.5	8.1			
55				7.5	7.1	6.8		
60					6.2	6.0	3.8	
65					5.5	5.3	3.6	2.0
70						4.7	3.5	
75							3.3	
80							3.1	
85							2.7	

Main boom 43.4 m

Radius	Jib length in (m)						
	22.7	28.7	34.4	40.4	49.1	55.1	69.5
(m)	t	t	t	t	t	t	t
34.3	13.9						
38	12.3	12.0					
40	11.5	11.2					
42	10.8	10.6	10.3				
46		9.4	9.2	8.9			
48		8.9	8.7	8.4			
50			8.2	7.9	7.5		
55				6.9	6.6	6.2	
60				6.1	5.7	5.5	
65					5.1	4.8	3.6
70						4.2	3.4
85							2.3

Main boom 55.1 m

Radius	Jib length in (m)						
	22.7	28.7	34.4	40.4	49.1	55.1	69.5
(m)	t	t	t	t	t	t	t
39.3	10.1						
40	9.9						
42	9.3						
44	8.9	8.4					
46	8.4	8.0	7.5				
48	7.9	7.6	7.2				
50		7.2	6.8	6.4			
55			6.1	5.6	5.0		
60				5.0	4.4	4.0	
65				4.5	3.9	3.5	
70					3.5	3.1	2.2
75						2.7	

Main boom 58.1 m

Radius	Jib length in (m)					
	22.7	28.7	34.4	40.4	49.1	55.1
(m)	t	t	t	t	t	t
40.5	9.1					
44	8.3	7.8				
48	7.5	7.1	6.7			
50		6.7	6.3			
55		6.0	5.6	5.2		
60			5.0	4.6	4.0	3.6
65				4.1	3.5	3.1
70					3.1	2.7
75					2.7	2.4
80						2.0

Main boom 60.8 m

Radius	Jib length in (m)				
	22.7	28.7	34.4	40.4	49.1
(m)	t	t	t	t	t
41.7	8.4				
44	7.9				
46	7.5	7.0			
48	7.1	6.7			
50	6.8	6.3	5.9		
55		5.6	5.3	4.8	
60			4.7	4.3	3.7
65				3.8	3.2
70					2.8
75					2.4

TLT 10576404 - M118422

Capacities in metric tonnes with luffing jib (No. 1309.xx), 62.3 t counterweight + 20 t carbody counterweight. Above lift chart is for reference only. For actual lift duty and complete chart with all available configurations please refer to lift chart in operator‘s cab or manual.

Lift chart - luffing jib (No. 1309.xx)

Main boom 45°

Main boom 25.7 m

Radius	Jib length in (m)						
	22.7	28.7	34.4	40.4	49.1	55.1	69.5
(m)	t	t	t	t	t	t	t
39.5	12.0						
40	11.9						
42	11.1						
46		9.7					
48		9.2					
50			8.5				
55				7.2			
60				6.3			
65					5.3		
70						4.4	
80							2.9
85							2.5

Main boom 37.4 m

Radius	Jib length in (m)					
	22.7	28.7	34.4	40.4	49.1	55.1
(m)	t	t	t	t	t	t
47.8	7.8					
48	7.8					
50	7.4					
55		6.2				
60			5.2			
65				4.4		
70					3.5	
75					3.0	2.7
80						2.4

Main boom 43.4 m

Radius	Jib length in (m)				
	22.7	28.7	34.4	40.4	49.1
(m)	t	t	t	t	t
52	6.1				
55	5.6				
60		4.7			
65			3.9		
70				3.2	
75					2.4
80					2.0

Main boom 55.1 m

Radius	Jib length in (m)
	22.7
(m)	t
60.3	3.3

Main boom 58.1 m

Radius	Jib length in (m)
	22.7
(m)	t
62.4	2.7
65	2.5

Main boom 60.8 m

Radius	Jib length in (m)
	22.7
(m)	t
64.3	2.1
65	2.0

TLT 10576404 - M118422

Capacities in metric tonnes with luffing jib (No. 1309.xx), 62.3 t counterweight + 20 t carbody counterweight. Above lift chart is for reference only. For actual lift duty and complete chart with all available configurations please refer to lift chart in operator‘s cab or manual.

Working range - luffing jib (No. 1713.xx) 78° - 15°

Main boom 88° - 45°

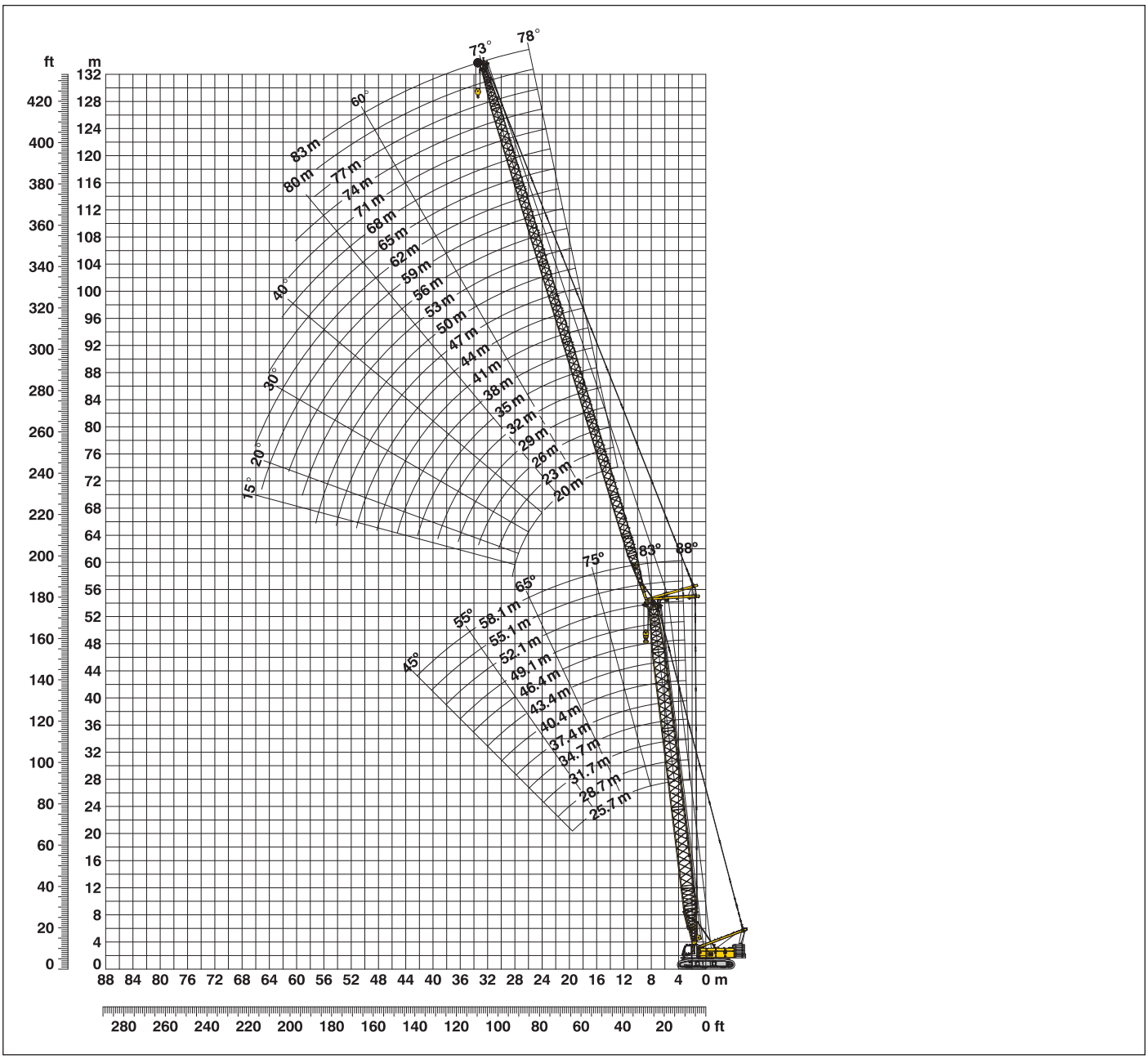

Boom configuration for main boom lengths (25.7 m - 58.1 m) - see table 1 on page 12

Jib configuration for jib lengths (20 m - 83 m)

	Length	Amount of jib extensions																					
Luffing jib foot	7 m	1	1	1	1	1	1	1	1	1	1	1	1	1	1	1	1	1	1	1	1	1	1
Luffing jib insert	3 m		1		1		1		1		1		1		1		1		1		1		1
Luffing jib insert	6 m	1	1			1	1			1	1			1	1			1	1			1	1
Luffing jib insert	12 m			1	1	1	1	2	2	2	2	3	3	3	3	4	4	4	4	5	5	5	5
Luffing jib head	7 m	1	1	1	1	1	1	1	1	1	1	1	1	1	1	1	1	1	1	1	1	1	1
Luffing jib length (m)		20	23	26	29	32	35	38	41	44	47	50	53	56	59	62	65	68	71	74	77	80	83

Lift chart - luffing jib (No. 1713.xx)

Main boom 88°

Main boom 25.7 m

Radius	Jib length in (m) 20	29	35	41	50	56	71	83
(m)	t	t	t	t	t	t	t	t
8	59.2							
10	51.6	43.5						
12	41.8	39.3	34.8					
13	37.8	35.5	33.1	28.2				
15	31.2	29.7	28.3	26.6	20.5			
16	28.7	26.9	26.2	24.9	20.0	16.5		
19	22.1	21.0	20.1	20.0	17.7	15.6	9.6	
22	17.1	16.9	16.2	15.4	15.0	13.4	9.1	6.5
30		11.0	10.6	10.2	9.7	8.8	7.8	5.7
36			8.4	7.8	7.6	6.6	5.8	4.9
42				6.5	5.8	5.2	4.4	3.8
46					5.1	4.4	3.6	3.1
50					4.4	3.7	3.0	2.3
55						3.1	2.2	

Main boom 37.4 m

Radius	Jib length in (m) 20	29	35	41	50	56	71	83
(m)	t	t	t	t	t	t	t	t
8.4	47.2							
11	38.4	34.5						
12	35.2	32.0	28.4					
13	32.3	29.4	27.2	23.3				
15	27.4	25.0	23.4	21.9	17.2			
16	25.2	22.9	21.6	20.8	17.0	14.0		
20	18.6	17.0	16.0	15.6	14.1	13.1	8.4	
22	16.3	14.9	14.0	13.5	12.3	11.4	8.1	5.6
32		8.8	8.6	8.3	7.3	6.9	5.8	4.7
38			6.5	7.1	5.8	5.4	4.4	3.6
42				6.3	5.0	4.6	3.6	2.9
46					4.3	3.9	3.0	2.3
50					3.8	3.4	2.4	
55						2.8		

Main boom 43.4 m

Radius	Jib length in (m) 20	29	35	41	50	56	71	83
(m)	t	t	t	t	t	t	t	t
8.6	40.2							
11	34.0	29.9						
12	31.5	28.1	24.9					
14	26.8	24.1	22.7	20.3				
15	24.5	22.5	21.1	19.3	15.5			
17	21.0	19.2	18.4	17.0	14.9	12.7		
20	17.3	15.6	14.8	13.8	12.6	11.7	7.7	
22	15.2	13.6	13.2	12.0	11.1	10.3	7.5	5.1
26		11.1	10.6	9.6	8.9	8.3	6.7	4.9
32		8.8	8.2	7.5	6.8	6.4	5.2	4.1
38			6.3	6.0	5.5	5.0	3.9	3.1
44				4.7	4.4	4.0	2.9	2.2
50					3.6	3.1	2.2	
55						2.6		

Main boom 52.1 m

Radius	Jib length in (m) 20	29	35	41	50	56	71	83
(m)	t	t	t	t	t	t	t	t
8.9	31.3							
11	28.1	23.6						
13	24.1	21.9	19.5					
14	22.5	20.2	18.6	16.5				
16	19.4	17.6	16.3	15.2	12.6			
17	18.2	16.4	15.4	14.3	12.3	10.5		
20	14.9	13.5	12.6	11.8	10.5	9.6	5.6	
24	11.6	10.8	10.0	9.4	8.4	7.7	5.4	3.3
28		8.9	8.4	7.8	7.0	6.4	4.6	3.3
32		7.9	7.2	6.7	5.9	5.5	3.9	2.8
38			5.8	5.5	4.8	4.3	3.0	2.0
44				4.4	3.9	3.4	2.1	
50					3.2	2.7		
55						2.3		

Main boom 55.1 m

Radius	Jib length in (m) 20	29	35	41	50	56	68
(m)	t	t	t	t	t	t	t
9	28.9						
11	26.4	21.7					
13	22.9	20.3	18.0				
14	21.4	18.8	17.2	15.2			
16	18.5	16.5	15.2	14.0	11.7		
17	17.4	15.3	14.4	13.3	11.5	9.9	
20	14.4	12.7	11.8	11.1	9.9	9.0	5.9
24	11.2	10.2	9.5	8.8	8.0	7.2	5.5
28		8.5	8.0	7.4	6.6	6.0	4.6
32		7.5	6.9	6.4	5.7	5.2	3.9
38			5.8	5.2	4.6	4.1	3.0
44				4.2	3.7	3.2	2.2
50					3.1	2.6	
55						2.1	

Main boom 58.1 m

Radius	Jib length in (m) 20	29	35	41	47
(m)	t	t	t	t	t
9.1	26.3				
12	22.9	19.5			
13	21.2	18.7	16.6		
14	19.9	17.5	15.9	14.0	
15	18.6	16.5	15.3	13.7	10.6
16	17.4	15.4	14.2	13.0	10.4
17	16.3	14.4	13.4	12.4	10.0
18	15.4	13.6	12.6	11.6	9.8
20	13.6	12.0	11.1	10.5	8.9
24	10.6	9.7	9.0	8.3	7.4
32		7.2	6.6	6.1	5.3
38			5.5	5.0	4.4
44				4.0	3.6
50					2.8

TLT 10576404 - M118422

Capacities in metric tonnes with luffing jib (No. 1713.xx), 62.3 t counterweight + 20 t carbody counterweight. Above lift chart is for reference only. For actual lift duty and complete chart with all available configurations please refer to lift chart in operator's cab or manual.

Lift chart - luffing jib (No. 1713.xx)

Main boom 83°

Main boom 25.7 m

Radius	Jib length in (m) 20	29	35	41	50	56	71	83
(m)	t	t	t	t	t	t	t	t
12	51.7							
15	42.3	37.8						
17	34.9	33.7	31.0					
19	28.9	29.3	27.8	24.9				
22	22.2	23.1	22.8	22.1	18.0			
24	19.1	19.7	20.0	19.4	17.2	14.2		
28		15.3	15.5	15.3	14.8	13.2	8.5	
32		12.5	12.6	12.4	12.4	11.8	8.1	5.7
34		10.8	11.5	11.3	11.2	11.3	7.9	5.5
38			9.7	9.4	9.4	9.0	7.4	5.0
44				7.5	7.1	6.8	6.2	4.6
50					5.6	5.1	5.1	4.0
60						3.1	2.9	2.9
65							2.1	

Main boom 37.4 m

Radius	Jib length in (m) 20	29	35	41	50	56	71	83
(m)	t	t	t	t	t	t	t	t
13.4	40.7							
16	34.9	30.2						
18	30.0	28.0	24.9					
20	25.7	24.3	23.1	20.6				
24	18.7	18.3	17.8	17.6	14.7	12.0		
26	16.6	16.2	15.8	15.6	14.2	11.8		
30		13.4	12.9	12.7	12.0	11.1	7.6	
32		12.4	11.7	11.6	11.1	10.5	7.4	5.1
34		11.4	10.7	10.6	10.0	10.0	7.2	5.1
38			9.2	9.0	8.3	8.2	6.8	4.9
40			8.5	8.3	7.7	7.4	6.7	4.7
46				6.6	5.9	5.8	5.3	4.3
55					4.2	4.0	3.4	2.9
60						3.2	2.6	2.2

Main boom 43.4 m

Radius	Jib length in (m) 20	29	35	41	50	56	71	83
(m)	t	t	t	t	t	t	t	t
14.1	34.2							
17	29.4	25.2						
19	25.5	23.2	20.9					
22	20.2	19.5	18.4	16.7				
24	17.7	16.9	16.4	15.4	13.3			
26	16.0	14.9	14.8	13.8	12.5	11.1		
30		12.4	12.1	11.5	10.9	10.2	7.0	
34		10.5	10.2	9.8	9.4	8.9	6.7	4.6
36		9.4	9.5	9.0	8.5	8.3	6.5	4.6
42			7.1	7.1	6.7	6.4	5.8	4.2
44				6.6	6.2	5.9	5.4	4.1
46				6.2	5.7	5.4	4.8	4.0
55					4.1	3.8	3.1	2.6
60						3.1	2.4	

Main boom 52.1 m

Radius	Jib length in (m) 20	29	35	41	50	56	71	83
(m)	t	t	t	t	t	t	t	t
15.2	25.7							
18	22.4	19.1						
20	20.1	17.7	15.9					
22	18.1	16.0	14.7	13.2				
24	15.8	14.6	13.5	12.3	10.2			
26	14.2	13.1	12.5	11.5	9.9	8.7		
28	13.0	12.0	11.4	10.7	9.4	8.4		
34		9.4	8.9	8.5	8.0	7.2	4.7	3.1
36		8.8	8.3	7.9	7.3	6.9	4.5	3.1
42			6.8	6.4	5.8	5.4	3.9	2.6
48				5.3	4.7	4.3	3.1	2.2
50					4.4	4.0	2.8	2.0
55					3.7	3.3	2.3	
60						2.8		

Main boom 55.1 m

Radius	Jib length in (m) 20	29	35	41	50	56	68
(m)	t	t	t	t	t	t	t
15.6	23.4						
19	19.9	17.0					
20	18.9	16.2	14.4				
22	17.3	14.7	13.5	12.0			
26	13.8	12.3	11.6	10.6	9.1		
28	12.7	11.5	10.7	10.0	8.7	7.8	
30		10.5	9.9	9.4	8.3	7.4	4.9
34		9.0	8.5	8.0	7.6	6.7	4.6
36		8.4	7.9	7.5	6.9	6.4	4.4
40			6.9	6.5	6.0	5.5	4.0
42			6.5	6.0	5.6	5.1	3.8
48				5.0	4.5	4.1	3.0
55					3.6	3.1	2.2
60						2.6	

Main boom 58.1 m

Radius	Jib length in (m) 20	29	35	41	50
(m)	t	t	t	t	t
15.9	20.9				
19	18.2	15.5			
22	15.9	13.6	12.3		
24	14.5	12.6	11.3	10.3	
26	13.2	11.6	10.6	9.7	7.6
28	12.1	10.9	9.9	9.1	7.2
32		9.2	8.8	8.1	6.6
36		8.1	7.5	7.2	5.9
38		7.4	7.1	6.7	5.6
40			6.7	6.2	5.3
42			6.3	5.8	5.0
44				5.5	4.7
48				4.8	4.0
55					3.2

TLT 10576404 - M118422

Capacities in metric tonnes with luffing jib (No. 1713.xx), 62.3 t counterweight + 20 t carbody counterweight. Above lift chart is for reference only. For actual lift duty and complete chart with all available configurations please refer to lift chart in operator‘s cab or manual.

Lift chart - luffing jib (No. 1713.xx)

Main boom 75°

Main boom 25.7 m

Radius	Jib length in (m) 20	29	35	41	50	56	71	83
(m)	t	t	t	t	t	t	t	t
18.1	24.0							
22	28.9	28.0						
26	23.5	23.1	22.6					
28	20.3	21.1	20.8	20.0				
32		17.0	16.6	15.9	15.1			
34		15.5	15.1	14.3	13.6	12.6		
36		13.9	13.8	13.3	12.6	12.0		
40			11.8	11.2	10.6	10.3	7.6	
42			10.7	10.4	10.0	9.4	7.5	
48				8.3	8.0	7.4	6.4	4.8
55					6.3	5.9	5.0	4.3
60						4.9	4.2	3.5
70							2.9	2.4
75							2.2	

Main boom 37.4 m

Radius	Jib length in (m) 20	29	35	41	50	56	71	83
(m)	t	t	t	t	t	t	t	t
21.1	24.0							
26	22.3	21.1						
28	20.4	19.5	18.8					
30	18.7	18.2	17.5	16.7				
32	12.1	16.9	16.3	15.7				
34		15.6	15.3	14.7	13.4			
38		13.6	13.3	13.0	12.1	11.3		
40		12.7	12.4	12.2	11.3	10.8		
44			10.8	10.7	10.0	9.5	6.8	
48				9.3	8.7	8.2	6.6	4.5
50				8.5	8.1	7.7	6.4	4.4
60					5.5	5.5	4.7	3.7
65						4.4	3.9	3.2
75							2.6	2.2

Main boom 43.4 m

Radius	Jib length in (m) 20	29	35	41	50	56	71	83
(m)	t	t	t	t	t	t	t	t
22.7	24.1							
28	19.5	18.3						
30	18.2	17.1	16.1					
32	16.7	16.0	15.2	13.6				
36		14.1	13.5	12.5	10.9			
38		13.1	12.7	11.8	10.6	9.4		
42		11.0	11.2	10.6	9.7	8.9		
44			10.5	10.0	9.2	8.6		
46			9.9	9.5	8.9	8.2	6.0	
48			8.7	8.9	8.4	7.8	5.9	
50				8.3	7.9	7.5	5.7	4.0
60					5.6	5.7	4.8	3.5
65						4.6	4.0	3.1
75							2.7	2.2

Main boom 52.1 m

Radius	Jib length in (m) 20	29	35	41	50	56	71	83
(m)	t	t	t	t	t	t	t	t
24.9	17.6							
30	15.4	13.4						
32	14.6	12.7	11.6					
34	13.9	12.0	11.0	9.9				
36		11.4	10.5	9.7				
38		10.8	10.0	9.2	7.9			
40		10.4	9.6	8.8	7.7			
42		9.9	9.1	8.4	7.4	6.6		
44		9.4	8.8	8.1	7.1	6.4		
48			8.0	7.4	6.5	5.9	3.7	
50			7.4	7.2	6.3	5.6	3.6	
55				6.3	5.6	5.1	3.2	2.0
60					5.0	4.6	2.8	
70						3.1	2.2	

Main boom 55.1 m

Radius	Jib length in (m) 20	29	35	41	50	56	68	
(m)	t	t	t	t	t	t	t	
25.7	15.8							
30	14.4	12.1						
32	13.5	11.4						
34	12.9	10.8	10.0					
36	12.5	10.4	9.5	8.7				
38		9.9	9.1	8.3				
40		9.4	8.7	8.0	7.0			
42		9.1	8.3	7.6	6.7	5.9		
44		8.9	7.9	7.3	6.4	5.8		
46			7.7	7.0	6.1	5.5	3.5	
50			7.2	6.5	5.7	5.0	3.3	
55				5.9	5.1	4.5	3.0	
65					3.8	3.6	2.3	
70						3.1	2.0	

Main boom 58.1 m

Radius	Jib length in (m) 20	29	35	41	47			
(m)	t	t	t	t	t			
26.5	14.2							
32	12.3	10.3						
34	11.7	9.8	9.0					
36	11.3	9.4	8.6	7.7				
38		8.9	8.2	7.5	6.0			
40		8.5	7.8	7.1	5.9			
42		8.2	7.5	6.8	5.7			
44		8.0	7.1	6.5	5.4			
46		7.3	6.9	6.3	5.2			
48			6.7	6.0	5.0			
50			6.5	5.8	4.8			
55				5.4	4.4			
60					4.1			

TLT 10576404 - M118422

Capacities in metric tonnes with luffing jib (No. 1713.xx), 62.3 t counterweight + 20 t carbody counterweight. Above lift chart is for reference only. For actual lift duty and complete chart with all available configurations please refer to lift chart in operator's cab or manual.

Lift chart - luffing jib (No. 1713.xx)

Main boom 65°

Main boom 25.7 m

Radius	Jib length in (m) 20	29	35	41	50	56	71	83
(m)	t	t	t	t	t	t	t	t
25.3	22.8							
32	17.0	16.6						
34		15.4	15.1					
38		13.3	13.1	12.8				
40		12.5	12.2	12.0				
42			11.5	11.2				
44			10.8	10.5	10.1			
46			10.1	9.9	9.5	8.9		
50				8.8	8.4	8.0		
55					7.3	6.7	5.5	
60					6.3	5.8	4.8	
65						5.1	4.1	3.5
75							3.0	2.3
80							2.6	

Main boom 37.4 m

Radius	Jib length in (m) 20	29	35	41	50	56	71	83
(m)	t	t	t	t	t	t	t	t
30.2	16.7							
36	13.4	12.9						
38	12.1	12.1						
40		11.3	10.9					
42		10.6	10.2					
44		9.9	9.6	9.3				
46		9.3	9.0	8.8				
48			8.5	8.2	7.8			
50			8.0	7.8	7.3			
55				6.7	6.3	6.0		
60					5.5	5.2	4.1	
65					4.8	4.5	3.5	
70						3.9	2.9	2.1
80							2.1	

Main boom 43.4 m

Radius	Jib length in (m) 20	29	35	41	50	56	71
(m)	t	t	t	t	t	t	t
32.8	14.2						
38	11.8	11.3					
40	11.0	10.5					
42		9.9	9.5				
46		8.7	8.4	8.0			
48		8.2	7.9	7.6			
50			7.4	7.1	6.5		
55			6.4	6.2	5.7	5.2	
60				5.3	4.9	4.5	
65					4.3	3.9	2.8
70						3.4	2.3
75						2.9	

Main boom 52.1 m

Radius	Jib length in (m) 20	29	35	41	50	56
(m)	t	t	t	t	t	t
36.4	11.0					
38	10.5					
42	9.3	8.5				
44	8.7	8.0				
46		7.6	7.1			
48		7.2	6.7			
50		6.8	6.3	5.9		
55			5.5	5.1	4.4	
60				4.5	3.8	3.3
65					3.3	2.8
70					2.8	2.4
75						2.0

Main boom 55.1 m

Radius	Jib length in (m) 20	29	35	41	50	56
(m)	t	t	t	t	t	t
37.7	10.0					
44	8.3	7.5				
46		7.1				
48		6.7	6.2			
50		6.4	5.8	5.4		
55			5.1	4.7	4.0	
60			4.5	4.1	3.4	2.9
65				3.5	2.9	2.5
70					2.5	2.0

Main boom 58.1 m

Radius	Jib length in (m) 20	29	35	41	50
(m)	t	t	t	t	t
39	9.0				
44	7.8				
46	7.3	6.6			
48		6.2	5.7		
50		5.9	5.4		
55		5.1	4.7	4.2	
60			4.1	3.6	3.0
65				3.1	2.5
70					2.1

TLT 10576404 - M118422

Capacities in metric tonnes with luffing jib (No. 1713.xx), 62.3 t counterweight + 20 t carbody counterweight. Above lift chart is for reference only. For actual lift duty and complete chart with all available configurations please refer to lift chart in operator's cab or manual.

Lift chart - luffing jib (No. 1713.xx)

Main boom 45°

Main boom 25.7 m

Radius	Jib length in (m) 20	29	35	41	50	56		
(m)	t	t	t	t	t	t		
37.3	12.4							
38	12.1							
40	11.3							
46		9.0						
48		8.5						
50			7.7					
55			6.7	6.4				
60				5.6				
65					4.5			
70						3.6		
75						3.1		

Main boom 37.4 m

Radius	Jib length in (m) 20	29	35	41	50			
(m)	t	t	t	t	t			
45.6	7.8							
46	7.7							
48	7.3							
55		5.5						
60			4.4					
65				3.5				
75					2.2			

Main boom 43.4 m

Radius	Jib length in (m) 20	29	35	41				
(m)	t	t	t	t				
49.8	5.9							
50	5.9							
60		3.9						
65			3.1					
70				2.3				

Main boom 52.1 m

Radius	Jib length in (m) 20	29						
(m)	t	t						
56	3.7							
65		2.2						

Main boom 55.1 m

Radius	Jib length in (m) 20						
(m)	t						
58.1	3.0						
60	2.8						

Main boom 58.1 m

Radius	Jib length in (m) 20						
(m)	t						
60.2	2.2						

TLT 10576404 - M118422

Capacities in metric tonnes with luffing jib (No. 1713.xx), 62.3 t counterweight + 20 t carbody counterweight. Above lift chart is for reference only. For actual lift duty and complete chart with all available configurations please refer to lift chart in operator's cab or manual.

Working range - fixed jib (No. 0806.xx) 15° and 30°

Main boom 88° - 45°

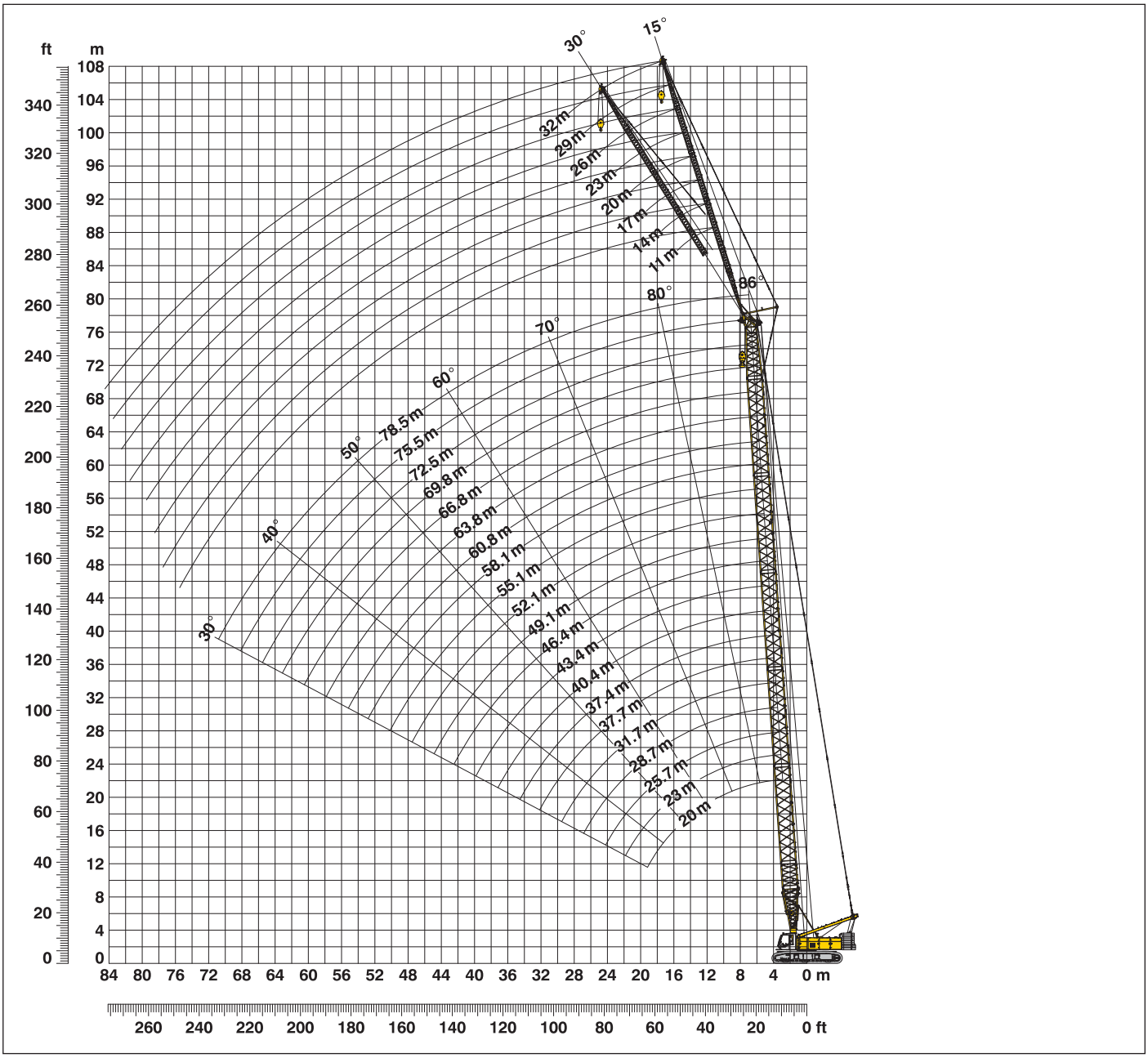

Boom configuration for boom lengths (20 m - 78.5 m) - see table 1 on page 12

Fixed jib configuration for fixed jib lengths (11 m - 32 m)

	Length	Amount of fixed jib extensions							
Fixed jib foot	5.5 m	1	1	1	1	1	1	1	1
Fixed jib insert	3 m		1		1		1		1
Fixed jib insert	6 m			1	1	2	2	3	3
Fixed jib head	5.5 m	1	1	1	1	1	1	1	1
Fixed jib length (m)		11	14	17	20	23	26	29	32

Lift chart - fixed jib (No. 0806.xx)

Offset 15°

Main boom 20 m

Radius	Fixed jib length in (m)			
	11	20	26	32
(m)	t	t	t	t
7	24.0			
10	24.0	14.7		
13	23.7	13.5	8.6	
15	23.3	12.8	8.2	5.2
18	21.8	11.9	7.6	4.9
22	19.8	10.8	7.0	4.5
26	17.6	9.9	6.5	4.2
28	16.6	9.5	6.3	4.1
30	15.4	9.1	6.1	4.0
38		7.7	5.6	3.7
44			5.4	3.5
50				3.5

Main boom 28.7 m

Radius	Fixed jib length in (m)			
	11	20	26	32
(m)	t	t	t	t
6.2	24.0			
10	24.0	14.8		
13	24.0	13.8	8.8	
15	23.4	13.2	8.4	5.2
18	22.3	12.3	7.9	4.9
26	19.4	10.7	6.8	4.3
30	18.2	10.1	6.5	4.1
34	16.4	9.4	6.2	3.9
38	14.0	8.7	6.0	3.8
46		7.7	5.6	3.6
50			5.5	3.5
55				3.5

Main boom 40.4 m

Radius	Fixed jib length in (m)			
	11	20	26	32
(m)	t	t	t	t
6.6	24.0			
11	24.0	14.1		
13	23.8	13.6	8.6	
16	23.2	12.8	8.2	5.1
22	20.8	11.5	7.3	4.6
30	18.9	10.4	6.6	4.2
38	13.5	9.6	6.2	3.9
46	10.1	8.6	5.8	3.7
48	9.4	8.3	5.7	3.6
55		7.8	5.5	3.5
60			5.4	3.4
65				3.4

Main boom 52.1 m

Radius	Fixed jib length in (m)			
	11	20	26	32
(m)	t	t	t	t
7	24.0			
11	23.8	13.5		
14	23.1	12.8	8.2	
16	22.3	12.4	8.0	5.0
22	20.3	11.2	7.3	4.6
30	18.0	10.3	6.6	4.2
38	12.9	9.8	6.2	4.0
46	9.5	9.1	5.9	3.8
55	6.9	7.4	5.6	3.6
65		5.3	5.4	3.4
70			4.7	3.4
75				3.4

Main boom 58.1 m

Radius	Fixed jib length in (m)			
	11	20	26	32
(m)	t	t	t	t
7.2	24.0			
11	23.5	13.0		
14	22.2	12.5	8.1	
16	21.5	12.1	7.9	4.9
22	19.5	11.0	7.2	4.6
30	17.3	10.2	6.6	4.3
38	12.6	9.6	6.2	4.0
46	9.2	9.1	5.9	3.8
60	5.4	6.0	5.5	3.5
70		4.2	4.4	3.4
75			3.7	3.3
80				3.3

Main boom 66.8 m

Radius	Fixed jib length in (m)			
	11	20	26	32
(m)	t	t	t	t
7.5	22.7			
12	21.3	12.0		
14	20.5	11.6	7.6	
17	19.3	11.1	7.4	4.8
22	17.5	10.3	6.8	4.6
30	15.9	9.5	6.3	4.3
38	12.2	9.1	6.0	4.0
46	8.7	8.4	5.8	3.8
60	5.0	5.5	5.3	3.5
70	3.3	3.8	4.0	3.4
80		2.4	2.7	2.9
85			2.1	2.3

Main boom 72.5 m

Radius	Fixed jib length in (m)			
	11	20	26	32
(m)	t	t	t	t
7.7	21.0			
12	19.6	11.1		
14	18.9	10.8	7.1	
17	17.7	10.4	6.9	4.8
22	16.0	9.9	6.6	4.5
30	14.6	9.1	6.2	4.2
38	11.6	8.7	5.9	4.0
46	8.4	8.0	5.6	3.8
60	4.7	5.3	5.2	3.5
75	2.3	2.7	3.0	3.3
80		2.1	2.4	2.6
85				2.1

Main boom 75.5 m

Radius	Fixed jib length in (m)			
	11	20	26	32
(m)	t	t	t	t
7.8	19.8			
12	17.9	11.2		
15	17.0	10.8	7.2	
17	16.5	10.5	7.0	4.3
22	14.8	9.8	6.6	4.1
30	13.2	9.0	6.1	3.9
38	11.3	8.6	5.8	3.6
46	8.2	7.9	5.6	3.5
60	4.5	5.1	5.2	3.2
70	2.8	3.3	3.6	3.1
75	2.1	2.6	2.9	3.1
80			2.2	2.5

Main boom 78.5 m

Radius	Fixed jib length in (m)			
	11	14	20	26
(m)	t	t	t	t
7.9	18.8			
10	17.8	15.7		
12	16.4	14.7	10.7	
15	15.8	13.9	10.1	6.7
22	13.8	12.5	9.0	5.9
30	12.0	11.1	8.6	5.4
38	10.6	10.2	8.2	5.2
46	7.9	8.0	7.6	5.0
60	4.4	4.6	4.9	4.6
70	2.6	2.8	3.1	3.5
75		2.1	2.4	2.7
80				2.1

TLT 10576404 - M118422

Capacities in metric tonnes with fixed jib (No. 0806.xx), 62.3 t counterweight + 20 t carbody counterweight. Above lift chart is for reference only. For actual lift duty and complete chart with all available configurations please refer to lift chart in operator‘s cab or manual.

Lift chart - fixed jib (No. 0806.xx)
Offset 30°

Main boom 20 m

Radius	Fixed jib length in (m) 11	20	26	32
(m)	t	t	t	t
7	24.0			
10	24.0	14.7		
13	23.7	13.5	8.6	
15	23.3	12.8	8.2	5.2
18	21.8	11.9	7.6	4.9
22	19.8	10.8	7.0	4.5
26	17.6	9.9	6.5	4.2
28	16.6	9.5	6.3	4.1
30	15.4	9.1	6.1	4.0
38		7.7	5.6	3.7
44			5.4	3.5
50				3.5

Main boom 28.7 m

Radius	Fixed jib length in (m) 11	20	26	32
(m)	t	t	t	t
8.9	24.0			
15	21.5	11.8		
19	20.1	10.9	6.9	
24	18.0	9.8	6.4	4.0
26	17.0	9.4	6.2	3.9
30	15.8	8.8	6.0	3.8
34	14.7	8.2	5.8	3.7
36	14.4	8.0	5.7	3.6
38	14.1	7.9	5.6	3.6
46		7.4	5.4	3.5
50			5.4	3.5
55				3.5

Main boom 40.4 m

Radius	Fixed jib length in (m) 11	20	26	32
(m)	t	t	t	t
9.3	23.2			
16	20.9	11.3		
19	20.0	10.8	6.8	
24	18.9	10.0	6.3	4.0
30	17.3	9.2	6.0	3.8
38	13.7	8.3	5.7	3.6
42	11.8	8.0	5.6	3.6
46	10.2	7.8	5.5	3.5
48	9.5	7.6	5.4	3.5
55		7.4	5.4	3.4
60			5.3	3.4
65				3.4

Main boom 52.1 m

Radius	Fixed jib length in (m) 11	20	26	32
(m)	t	t	t	t
9.7	21.9			
15	20.4			
16	20.2	10.9		
20	19.1	10.4	6.6	
24	18.3	9.9	6.3	4.0
30	17.2	9.3	6.0	3.8
38	13.2	8.7	5.7	3.7
46	9.7	8.0	5.5	3.5
55	7.0	7.6	5.4	3.4
65		5.4	5.3	3.4
70			4.8	3.4
75				3.4

Main boom 58.1 m

Radius	Fixed jib length in (m) 11	20	26	32
(m)	t	t	t	t
9.9	21.1			
16	19.6	10.7		
20	18.5	10.2	6.5	
24	17.6	9.7	6.2	4.0
30	16.7	9.2	5.9	3.8
38	12.9	8.8	5.7	3.7
46	9.4	8.2	5.5	3.5
50	8.1	7.9	5.5	3.5
60	5.5	6.2	5.3	3.4
70		4.3	4.6	3.4
75			3.8	3.4
85				2.8

Main boom 66.8 m

Radius	Fixed jib length in (m) 11	20	26	32
(m)	t	t	t	t
10.2	19.5			
16	18.2	9.9		
20	17.0	9.5	6.2	
24	15.8	9.1	6.0	3.9
30	15.1	8.7	5.7	3.8
38	12.5	8.5	5.5	3.6
46	9.0	8.0	5.4	3.5
50	7.7	7.8	5.3	3.5
60	5.1	5.8	5.1	3.4
70	3.3	3.9	4.3	3.4
80		2.4	2.8	3.1
85			2.1	2.5

Main boom 72.5 m

Radius	Fixed jib length in (m) 11	20	26	32
(m)	t	t	t	t
10.4	18.2			
17	16.5	9.5		
20	15.7	9.2	6.0	
24	14.6	8.8	5.8	3.8
30	13.7	8.5	5.6	3.7
38	12.0	8.2	5.4	3.6
46	8.7	7.8	5.2	3.5
60	4.9	5.6	5.1	3.4
70	3.1	3.7	4.0	3.3
75	2.3	2.9	3.3	3.3
80		2.2	2.6	2.9
85				2.3

Main boom 75.5 m

Radius	Fixed jib length in (m) 11	20	26	32
(m)	t	t	t	t
10.5	17.1			
17	15.6	9.4		
22	14.3	9.0	5.9	
24	13.8	8.8	5.8	3.6
30	12.8	8.5	5.5	3.5
38	11.6	8.1	5.3	3.4
46	8.5	7.7	5.2	3.3
60	4.7	5.4	5.0	3.2
70	2.9	3.5	3.9	3.1
75	2.2	2.7	3.1	3.1
80		2.1	2.4	2.7
85				2.1

Main boom 78.5 m

Radius	Fixed jib length in (m) 11	14	20	26
(m)	t	t	t	t
10.6	16.3			
13	15.9	13.5		
17	14.8	12.9	8.6	
22	13.6	12.0	8.4	5.2
30	12.1	10.9	8.1	4.6
38	11.0	10.1	7.8	4.6
46	8.2	8.4	7.5	4.4
50	7.0	7.2	7.2	4.3
60	4.5	4.8	5.2	4.2
70	2.7	2.9	3.4	3.8
75	2.0	2.2	2.6	3.0
80				2.3

TLT 10576404 - M118422

Capacities in metric tonnes with fixed jib (No. 0806.xx), 62.3 t counterweight + 20 t carbody counterweight. Above lift chart is for reference only. For actual lift duty and complete chart with all available configurations please refer to lift chart in operator's cab or manual.

Working range - fixed jib (No. 1008.xx) 15° and 30°

Main boom 88° - 30°

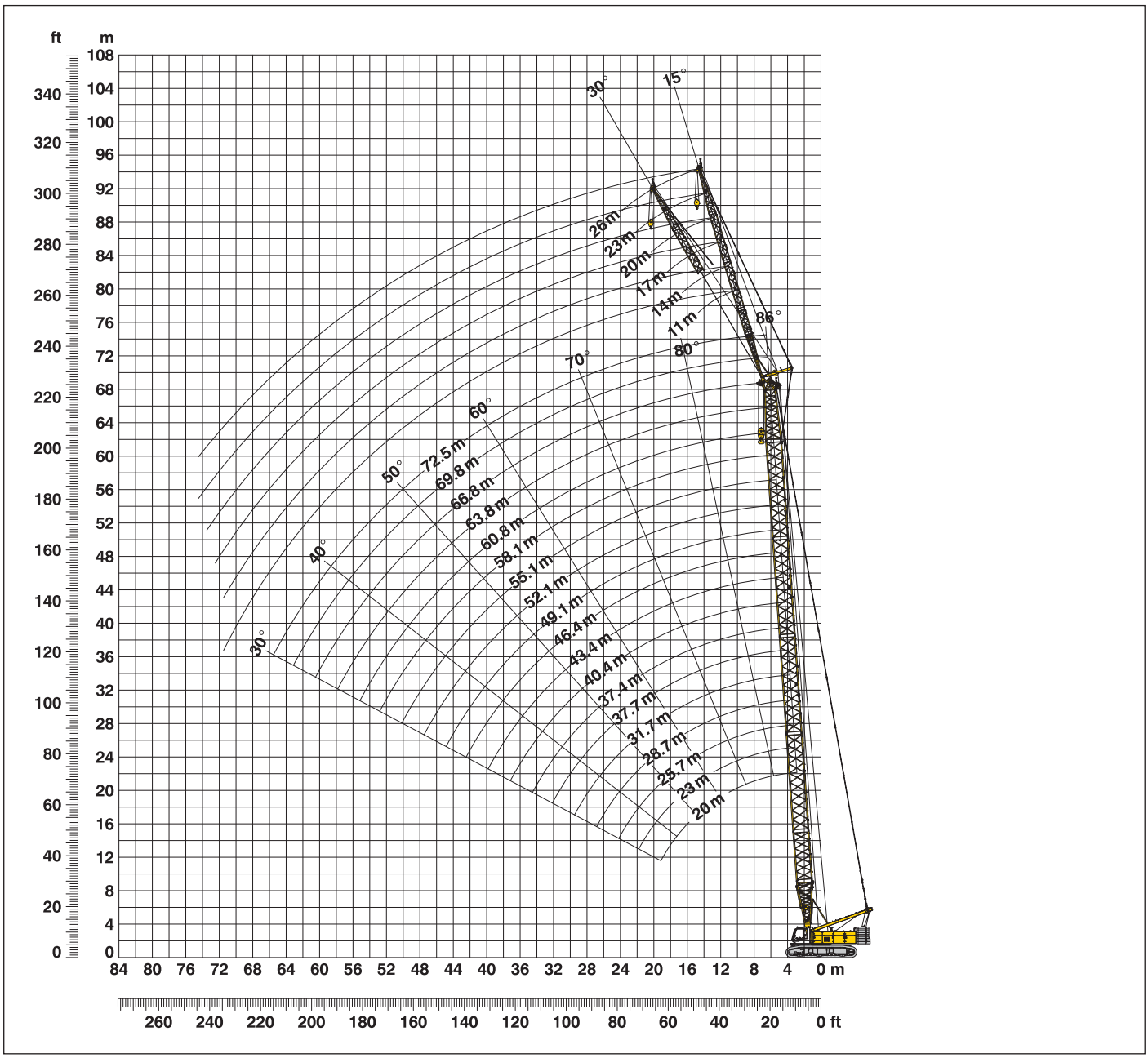

Boom configuration for boom lengths (20 m - 72.5 m) - see table 1 on page 12

Fixed jib configuration for fixed jib lengths (11 m - 26 m)

	Length	Amount of fixed jib extensions					
Fixed jib foot	5.5 m	1	1	1	1	1	1
Fixed jib insert	3 m		1		1		1
Fixed jib insert	6 m			1	1	2	2
Fixed jib head	5.5 m	1	1	1	1	1	1
Fixed jib length (m)		11	14	17	20	23	26

Lift chart - fixed jib (No. 1008.xx)

Offset 15°

Main boom 20 m

Radius	Fixed jib length in (m)			
	11	14	20	26
(m)	t	t	t	t
5.7	35.9			
7	35.9	35.9		
10	35.9	33.5	24.7	
12	34.9	29.9	22.2	18.1
14	32.9	26.9	19.9	15.9
18	30.7	23.5	16.6	13.2
22	28.0	22.4	14.5	11.4
26	23.0	20.1	14.2	10.4
30	18.8	18.1	13.1	10.4
32		17.4	12.5	10.2
38			11.3	9.0
44				8.1

Main boom 28.7 m

Radius	Fixed jib length in (m)			
	11	14	20	26
(m)	t	t	t	t
6	35.9			
8	35.9	34.3		
10	35.9	32.9	26.8	
12	35.9	31.7	24.7	17.8
14	35.4	30.7	23.0	16.5
22	28.3	25.7	18.0	13.1
30	18.5	18.7	15.3	11.2
34	15.4	15.6	14.2	10.7
38	13.0	13.2	13.0	10.0
40		12.2	12.5	9.7
46			10.1	8.6
50				8.1

Main boom 40.4 m

Radius	Fixed jib length in (m)			
	11	14	20	26
(m)	t	t	t	t
6.4	35.9			
8	35.9	34.5		
10	35.9	33.7	26.9	
13	35.9	32.4	25.3	17.4
18	33.2	29.8	22.3	15.6
26	22.0	22.3	18.5	13.4
34	14.8	15.0	15.4	12.0
42	10.6	10.7	11.1	10.2
48	8.3	8.5	8.8	9.1
50		7.9	8.2	8.4
55			6.8	7.0
60				5.8

Main boom 46.4 m

Radius	Fixed jib length in (m)			
	11	14	20	26
(m)	t	t	t	t
6.6	35.9			
8	35.9	33.6		
11	35.9	32.8	25.3	
13	35.6	32.0	24.3	16.8
22	26.7	25.8	19.6	14.2
30	17.6	17.8	16.9	12.8
38	12.1	12.3	12.7	11.5
46	8.7	8.9	9.2	9.4
50	7.4	7.5	7.8	8.1
55		6.2	6.5	6.7
60			5.3	5.5
65				4.5

Main boom 52.1 m

Radius	Fixed jib length in (m)			
	11	14	20	26
(m)	t	t	t	t
6.8	35.9			
8	35.9	32.5		
11	35.5	31.9	23.8	
13	35.0	30.7	23.0	16.1
22	25.8	24.6	19.0	13.9
30	17.3	17.5	16.3	12.5
38	11.8	12.1	12.4	11.5
46	8.4	8.6	8.9	9.2
55	5.8	5.9	6.2	6.4
60		4.8	5.0	5.3
65			4.1	4.3
70				3.4

Main boom 58.1 m

Radius	Fixed jib length in (m)			
	11	14	20	26
(m)	t	t	t	t
7	34.8			
9	34.3	30.3		
11	33.1	29.5	21.9	
13	31.5	28.1	21.3	15.2
22	24.7	22.7	17.8	13.4
30	16.8	16.9	15.4	12.2
38	11.5	11.7	12.1	11.3
46	8.1	8.2	8.6	8.9
60	4.3	4.4	4.7	4.9
65		3.5	3.7	4.0
70			2.9	3.1
75				2.4

Main boom 66.8 m

Radius	Fixed jib length in (m)			
	11	14	20	26
(m)	t	t	t	t
7.3	27.9			
9	27.5	24.3		
11	26.5	23.7	18.4	
14	24.7	22.2	17.8	13.7
22	19.9	18.5	15.4	12.3
30	15.7	15.2	13.4	11.2
38	11.0	11.1	11.3	10.2
42	9.2	9.4	9.6	9.7
46	7.6	7.8	8.1	8.2
50	6.3	6.5	6.8	7.0
60	3.9	4.0	4.3	4.5
70	2.1	2.2	2.5	2.7

Main boom 69.8 m

Radius	Fixed jib length in (m)			
	11	14	17	20
(m)	t	t	t	t
7.4	24.6			
9	24.3	21.3		
10	24.0	21.3	18.9	
11	23.7	21.2	18.9	17.1
14	22.5	20.3	18.5	16.6
22	18.0	17.3	15.8	14.4
30	14.6	14.3	13.6	12.6
38	10.7	10.8	10.9	11.0
46	7.4	7.6	7.8	7.8
60	3.7	3.8	4.0	4.1
65	2.7	2.9	3.0	3.1
70		2.0	2.2	2.3

Main boom 72.5 m

Radius	Fixed jib length in (m)			
	11	14		
(m)	t	t		
7.8	22.4			
9	22.4	19.6		
14	20.5	18.6		
22	16.6	15.2		
30	14.0	12.9		
34	12.5	12.1		
38	10.5	10.6		
42	8.7	8.8		
46	7.3	7.4		
50	6.0	6.2		
60	3.6	3.7		
65	2.6	2.7		

TLT 10576404 - M118422

Capacities in metric tonnes with fixed jib (No. 1008.xx), 62.3 t counterweight + 20 t carbody counterweight. Above lift chart is for reference only. For actual lift duty and complete chart with all available configurations please refer to lift chart in operator's cab or manual.

Lift chart - fixed jib (No. 1008.xx)

Offset 30°

Main boom 20 m

Radius	Fixed jib length in (m)			
	11	14	20	26
(m)	t	t	t	t
8.3	32.0			
11	27.2	22.7		
14	24.0	19.4	14.4	
18	21.8	16.8	12.0	9.8
22	21.7	15.7	10.7	8.4
24	21.0	15.7	10.1	7.9
26	20.3	15.4	9.9	7.6
28	19.6	14.9	9.9	7.3
30	18.9	14.4	9.9	7.1
34		13.8	9.6	7.1
40			9.1	6.8
46				6.3

Main boom 28.7 m

Radius	Fixed jib length in (m)			
	11	14	20	26
(m)	t	t	t	t
8.6	33.3			
11	30.0	25.5		
15	26.6	22.3	15.2	
18	24.6	20.6	13.6	10.3
22	23.5	18.9	12.3	9.0
26	22.3	18.0	11.5	8.5
30	18.7	17.1	11.0	8.0
34	15.5	15.8	10.7	7.6
38	13.1	13.4	10.2	7.4
40		12.3	9.9	7.3
46			9.4	6.8
50				6.6

Main boom 40.4 m

Radius	Fixed jib length in (m)			
	11	14	20	26
(m)	t	t	t	t
9	35.7			
11	34.4	27.9		
15	30.7	25.3	17.1	
19	27.9	23.0	15.4	11.5
26	22.4	20.0	13.2	9.9
34	15.1	15.4	11.8	8.6
42	10.7	11.0	10.5	7.6
46	9.1	9.3	9.8	7.2
48	8.4	8.6	9.0	7.1
50		7.9	8.4	7.0
55			6.9	6.6
60				6.0

Main boom 46.4 m

Radius	Fixed jib length in (m)			
	11	14	20	26
(m)	t	t	t	t
9.3	34.5			
12	33.1	27.0		
15	30.2	25.2	16.5	
19	27.6	23.1	15.6	11.5
22	25.5	21.6	14.6	10.8
30	18.0	18.0	12.6	9.2
38	12.4	12.6	11.5	8.2
46	8.8	9.1	9.5	7.5
50	7.5	7.7	8.1	7.1
55		6.2	6.7	6.8
60			5.4	5.8
65				4.7

Main boom 52.1 m

Radius	Fixed jib length in (m)			
	11	14	20	26
(m)	t	t	t	t
9.5	32.4			
12	31.0	26.0		
15	28.8	24.3	16.3	
19	26.2	22.4	15.6	11.2
30	17.7	17.4	12.8	9.3
38	12.1	12.4	11.7	8.4
46	8.6	8.8	9.3	7.6
50	7.3	7.5	7.9	7.3
55	5.9	6.0	6.4	6.8
60		4.8	5.2	5.5
65			4.2	4.5
70				3.5

Main boom 58.1 m

Radius	Fixed jib length in (m)			
	11	14	20	26
(m)	t	t	t	t
9.7	29.3			
12	28.3	24.0		
16	25.7	22.3	15.8	
19	24.1	21.0	15.2	11.0
22	22.6	19.8	14.4	10.6
30	17.3	16.6	12.7	9.4
38	11.9	12.1	11.6	8.5
46	8.3	8.5	9.0	7.8
60	4.4	4.6	4.9	5.3
65		3.5	3.9	4.2
70			3.0	3.3
75				2.5

Main boom 66.8 m

Radius	Fixed jib length in (m)			
	11	14	20	26
(m)	t	t	t	t
10	23.7			
12	23.3	20.0		
16	21.4	19.0	14.2	
20	19.7	17.6	13.7	10.4
22	19.0	17.0	13.3	10.2
30	15.6	14.6	12.1	9.4
38	11.4	11.6	10.8	8.6
46	7.9	8.1	8.6	7.9
50	6.5	6.8	7.2	7.4
60	4.0	4.2	4.6	4.9
70	2.2	2.3	2.6	2.9
75				2.1

Main boom 69.8 m

Radius	Fixed jib length in (m)			
	11	14	17	20
(m)	t	t	t	t
10.1	21.8			
12	21.5	18.3		
14	20.9	18.1	15.6	
16	20.0	17.6	15.5	13.4
22	17.8	15.8	14.0	12.6
30	14.8	13.8	12.7	11.4
38	11.1	11.3	11.2	10.5
46	7.7	8.0	8.2	8.4
50	6.4	6.6	6.9	7.1
60	3.8	4.0	4.2	4.4
65	2.8	3.0	3.2	3.4
70		2.1	2.3	2.5

Main boom 72.5 m

Radius	Fixed jib length in (m)			
	11	14		
(m)	t	t		
10.4	19.4			
13	19.1	16.9		
14	18.9	16.7		
22	15.6	14.1		
30	13.3	12.1		
38	10.9	10.8		
42	9.1	9.3		
46	7.6	7.8		
50	6.3	6.5		
60	3.7	3.9		
65	2.7	2.9		
70		2.0		

TLT 10576404 - M118422

Capacities in metric tonnes with fixed jib (No. 1008.xx), 62.3 t counterweight + 20 t carbody counterweight. Above lift chart is for reference only. For actual lift duty and complete chart with all available configurations please refer to lift chart in operator‘s cab or manual.

LR 1160 – 890043514 – 04/2014 – Subject to change without notice.

Liebherr-Werk Nenzing GmbH
Dr. Hans Liebherr Str. 1, 6710 Nenzing/Austria
Tel.: +43 50809 41–473, Fax: +43 50809 41–499
crawler.crane@liebherr.com, www.liebherr.com
facebook.com/LiebherrConstruction